Product datasheet

Specifications

Tower Light - RG - 24V - LED - W.Buzzer - Base mounting

XVGB2SW

Main

Range of product	Harmony XVG
Product or component type	Complete pre-wired monolithic tower light
Beacon or indicator bank unit type	2 illuminated units
Material	PC (UL94 V-2): globe ABS (UL94HB): tube body Aluminium: tube
Mounting diameter	60 mm
Component name	XVG
Device mounting	Base mounting
Light source	LED steady red LED steady green
Light block color	Red/green
Indicator bank base type	Base with integrated buzzer

Complementary

rated supply voltage	24 V AC/DC
Cable cross section	0.33 mm²
Discrete output type	PNP and NPN
[Uimp] rated impulse withstand voltage	0.5 kV
Current consumption	140 mA
Noise level	85 dB
Power consumption in W	3.1 W
Fundamental frequency	2.64 kHz
Net weight	0.21 kg

Environment

Product certifications	CE EAC
Ambient air temperature for storage	-35…70 °C
Ambient air temperature for operation	-10…50 °C
IP degree of protection	IP42

Packing Units

Disclaimer: This documentation is not intended as a substitute for and is not to be used for determining suitability or reliability of these products for specific user applications

Unit Type of Package 1	PCE
Number of Units in Package 1	1
Package 1 Height	31.0 cm
Package 1 Width	8.5 cm
Package 1 Length	7.5 cm
Package 1 Weight	317.0 g
Unit Type of Package 2	S04
Number of Units in Package 2	21
Package 2 Height	30 cm
Package 2 Width	40 cm
Package 2 Length	60 cm
Package 2 Weight	7.767 kg
Unit Type of Package 3	P06
Number of Units in Package 3	84
Package 3 Height	75 cm
Package 3 Width	60 cm
Package 3 Length	80 cm
Package 3 Weight	39 kg

Contractual warranty

Warranty	18 months

Sustainability

Green Premium™ label is Schneider Electric's commitment to delivering products with best-in-class environmental performance. Green Premium promises compliance with the latest regulations, transparency on environmental impacts, as well as circular and low-CO_2 products.

Guide to assessing product sustainability is a white paper that clarifies global eco-label standards and how to interpret environmental declarations.

Learn more about Green Premium >

Guide to assess a product's sustainability >

Transparency RoHS/REACh

Well-being performance

Mercury Free

Rohs Exemption Information	Yes

Certifications & Standards

Reach Regulation	REACh Declaration
Eu Rohs Directive	Pro-active compliance (Product out of EU RoHS legal scope)
China Rohs Regulation	China RoHS declaration
Environmental Disclosure	Product Environmental Profile
Circularity Profile	End of Life Information

Dimensions Drawings

Dimensions

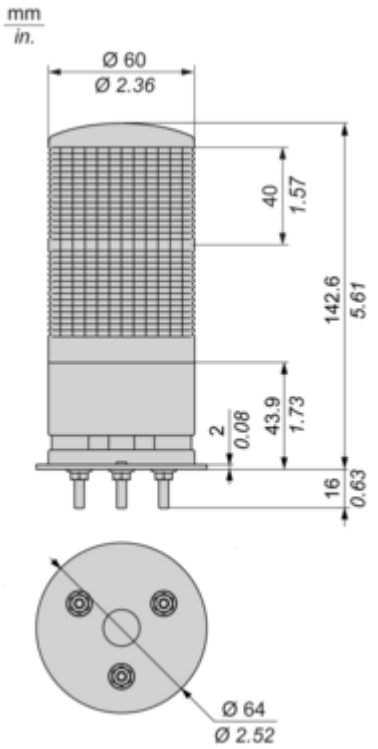

Mounting and Clearance

Mounting

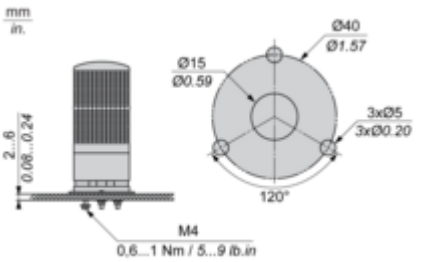

Connections and Schema

Wiring

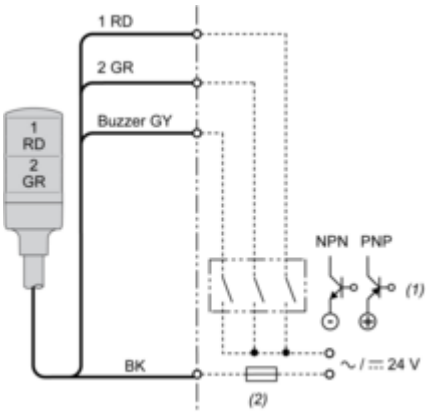

(1) “ON” for lighting and/or applying continuous sound.
(2) Fuse (rated current: 0.5 A)
RD : Red
GR : Green
GY : Grey
BK : Black

Technical Illustration

Dimensions

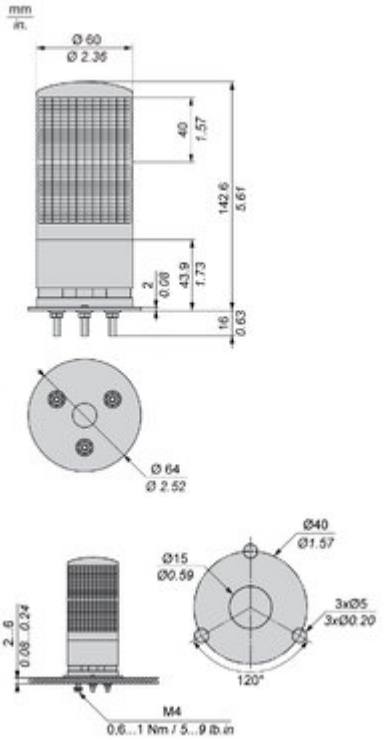

Technical Illustration

Wiring diagram

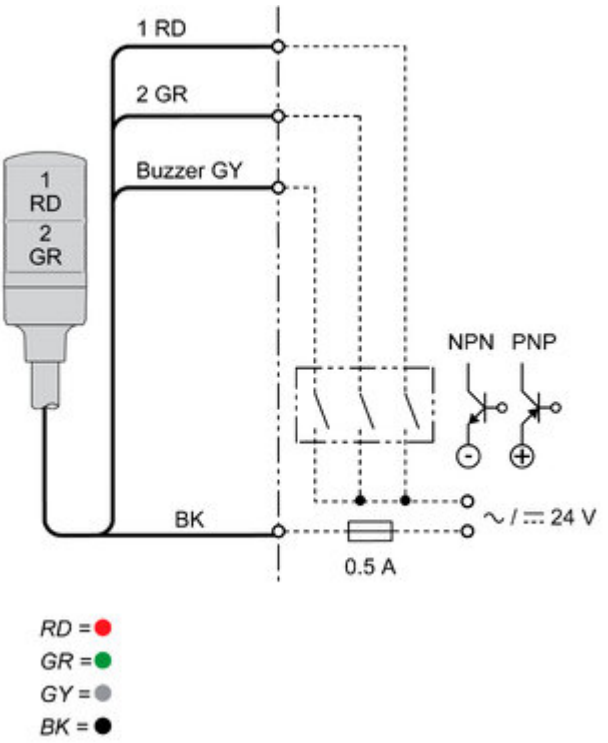

Offer Marketing Illustration

Product benefits / Features

Offer Marketing Illustration

Product benefits / Features

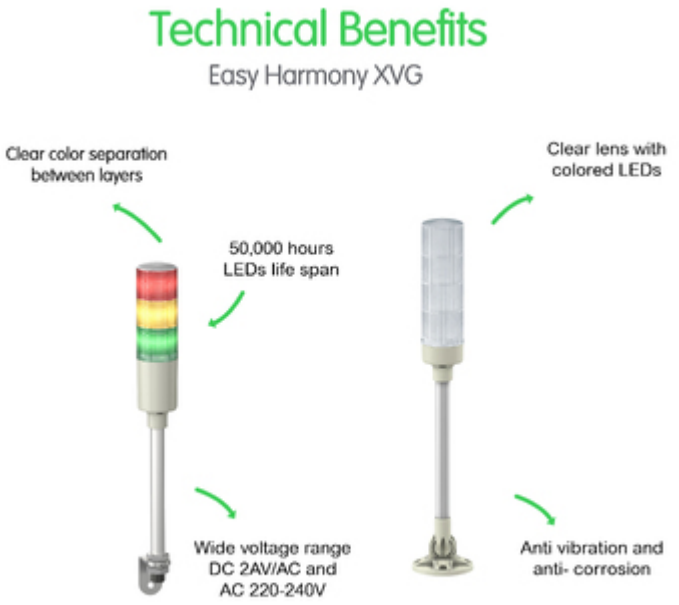

Image of product / Alternate images
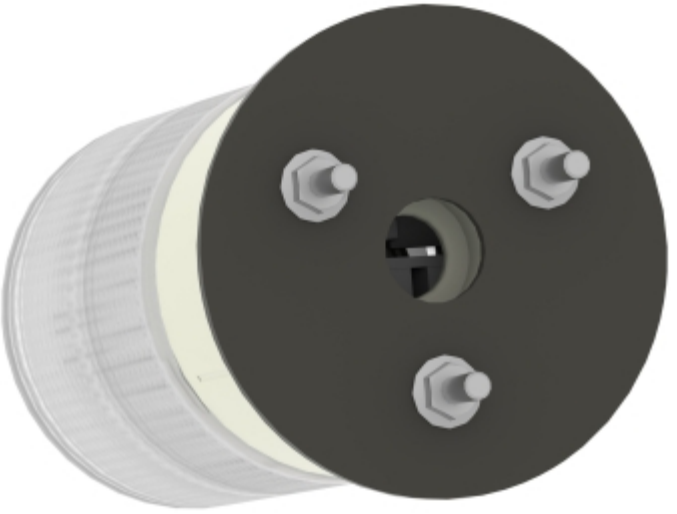
Alternative