# Product datasheet

Specifications

## Selector switch, metal, black, Ø22, 3 positions, stay put, 2 NO

XB4BD33

## Main

| | |
|---|---|
| **Range of product** | Harmony XB4 |
| **product or component type** | Selector switch |
| **Device short name** | XB4 |
| **Bezel material** | Chromium plated metal |
| **Fixing collar material** | Zamak |
| **Mounting diameter** | 22.5 mm |
| **Sale per indivisible quantity** | 1 |
| **Head type** | Standard |
| **Shape of signaling unit head** | Round |
| **Type of operator** | stay put |
| **Operator profile** | Black standard handle |
| **Operator position information** | 3 positions +/- 45° |
| **Contacts type and composition** | 2 NO |
| **Contact operation** | Slow-break |
| **Connections - terminals** | Screw clamp terminals, <= 2 x 1.5 mm² with cable end conforming to IEC 60947-1<br>Screw clamp terminals, >= 1 x 0.22 mm² without cable end conforming to IEC 60947-1 |

## Complementary

| | |
|---|---|
| **Height** | 47 mm |
| **Width** | 30 mm |
| **Depth** | 68 mm |
| **Terminals description ISO n°1** | (23-24)NO<br>(13-14)NO |
| **net weight** | 0.105 kg |
| **Resistance to high pressure washer** | 7000000 Pa at 55 °C, distance : 0.1 m |
| **Contacts usage** | Standard contacts |
| **Positive opening** | Without |
| **Torque value** | 0.14 N.m NO changing electrical state |
| **Mechanical durability** | 1000000 cycles |
| **Tightening torque** | 0.8…1.2 N.m conforming to IEC 60947-1 |

Disclaimer: This documentation is not intended as a substitute for and is not to be used for determining suitability or reliability of these products for specific user applications

| | |
|---|---|
| **Shape of screw head** | Cross compatible with Philips no 1 screwdriver<br>Cross compatible with pozidriv No 1 screwdriver<br>Slotted compatible with flat Ø 4 mm screwdriver<br>Slotted compatible with flat Ø 5.5 mm screwdriver |
| **Contacts material** | Silver alloy (Ag/Ni) |
| **Short-circuit protection** | 10 A cartridge fuse type gG conforming to IEC 60947-5-1 |
| **[Ith] conventional free air thermal current** | 10 A conforming to IEC 60947-5-1 |
| **[Ui] rated insulation voltage** | 600 V (pollution degree 3) conforming to IEC 60947-1 |
| **[Uimp] rated impulse withstand voltage** | 6 kV conforming to IEC 60947-1 |
| **[Ie] rated operational current** | 3 A at 240 V, AC-15, A600 conforming to IEC 60947-5-1<br>6 A at 120 V, AC-15, A600 conforming to IEC 60947-5-1<br>0.1 A at 600 V, DC-13, Q600 conforming to IEC 60947-5-1<br>0.27 A at 250 V, DC-13, Q600 conforming to IEC 60947-5-1<br>0.55 A at 125 V, DC-13, Q600 conforming to IEC 60947-5-1<br>1.2 A at 600 V, AC-15, A600 conforming to IEC 60947-5-1 |
| **Electrical durability** | 1000000 cycles, AC-15, 2 A at 230 V, operating rate <3600 cyc/h, load factor: 0.5 conforming to EN 60947-5-1 appendix C<br>1000000 cycles, AC-15, 3 A at 120 V, operating rate <3600 cyc/h, load factor: 0.5 conforming to EN 60947-5-1 appendix C<br>1000000 cycles, AC-15, 4 A at 24 V, operating rate <3600 cyc/h, load factor: 0.5 conforming to EN 60947-5-1 appendix C<br>1000000 cycles, DC-13, 0.2 A at 110 V, operating rate <3600 cyc/h, load factor: 0.5 conforming to EN 60947-5-1 appendix C<br>1000000 cycles, DC-13, 0.5 A at 24 V, operating rate <3600 cyc/h, load factor: 0.5 conforming to EN 60947-5-1 appendix C |
| **Electrical reliability** | Λ < 10exp(-6) at 5 V and 1 mA in clean environment conforming to IEC 60947-5-4<br>Λ < 10exp(-8) at 17 V and 5 mA in clean environment conforming to IEC 60947-5-4 |
| **device presentation** | Complete product |

# Environment

| | |
|---|---|
| **protective treatment** | TH |
| **Ambient air temperature for storage** | -40…70 °C |
| **Ambient air temperature for operation** | -40…70 °C |
| **Overvoltage category** | Class I conforming to IEC 60536 |
| **IP degree of protection** | IP69<br>IP69K<br>IP67 conforming to IEC 60529 |
| **NEMA degree of protection** | NEMA 13<br>NEMA 4X |
| **Standards** | IEC 60947-5-4<br>UL 508<br>IEC 60947-5-1<br>IEC 60947-5-5<br>JIS C8201-5-1<br>IEC 60947-1<br>CSA C22.2 No 14<br>JIS C8201-1 |
| **Product certifications** | GL<br>UL<br>LROS (Lloyds register of shipping)<br>CSA<br>BV<br>DNV |
| **Vibration resistance** | 5 gn (f= 2…500 Hz) conforming to IEC 60068-2-6 |
| **Shock resistance** | 30 gn (duration = 18 ms) for half sine wave acceleration conforming to IEC 60068-2-27<br>50 gn (duration = 11 ms) for half sine wave acceleration conforming to IEC 60068-2-27 |

## Packing Units

| | |
|---|---|
| **Unit Type of Package 1** | PCE |
| **Number of Units in Package 1** | 1 |
| **Package 1 Height** | 3.500 cm |
| **Package 1 Width** | 5.400 cm |
| **Package 1 Length** | 9.000 cm |
| **Package 1 Weight** | 104.000 g |
| **Unit Type of Package 2** | BB1 |
| **Number of Units in Package 2** | 5 |
| **Package 2 Height** | 8.800 cm |
| **Package 2 Width** | 3.400 cm |
| **Package 2 Length** | 26.500 cm |
| **Package 2 Weight** | 520.000 g |
| **Unit Type of Package 3** | S03 |
| **Number of Units in Package 3** | 100 |
| **Package 3 Height** | 30.000 cm |
| **Package 3 Width** | 30.000 cm |
| **Package 3 Length** | 40.000 cm |
| **Package 3 Weight** | 10.888 kg |

## Contractual warranty

| | |
|---|---|
| **Warranty** | 18 months |

## Sustainability

**Green Premium™ label** is Schneider Electric's commitment to delivering products with best-in-class environmental performance. Green Premium promises compliance with the latest regulations, transparency on environmental impacts, as well as circular and low-$CO_2$ products.

**Guide to assessing product sustainability** is a white paper that clarifies global eco-label standards and how to interpret environmental declarations.

Learn more about Green Premium >

Guide to assess a product's sustainability >

Transparency RoHS/REACh

## Well-being performance

| | |
|---|---|
| Reach Free Of Svhc | |
| Toxic Heavy Metal Free | |
| Mercury Free | |
| Rohs Exemption Information | Yes |

## Certifications & Standards

| | |
|---|---|
| **Reach Regulation** | REACh Declaration |
| **Eu Rohs Directive** | Pro-active compliance (Product out of EU RoHS legal scope)<br>EU RoHS Declaration |
| **China Rohs Regulation** | China RoHS declaration |
| **Environmental Disclosure** | Product Environmental Profile |
| **Weee** | The product must be disposed on European Union markets following specific waste collection and never end up in rubbish bins |
| **Circularity Profile** | End of Life Information |

## Dimensions Drawings

### Dimensions

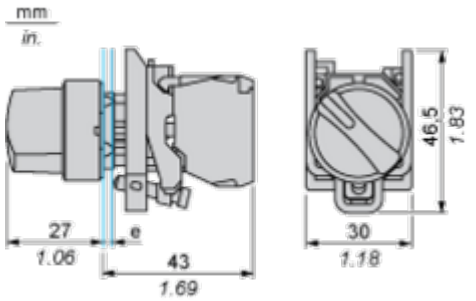


**e :** clamping thickness: 1 to 6 mm / 0.04 to 0.24 in.

## Mounting and Clearance

### Panel Cut-out for Pushbuttons, Switches and Pilot Lights (Finished Holes, Ready for Installation)

| Connection by Screw Clamp Terminals or Plug-in Connectors or on Printed Circuit Board | Connection by Faston Connectors |
|---|---|
| 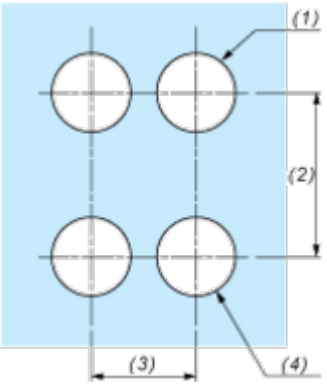  | 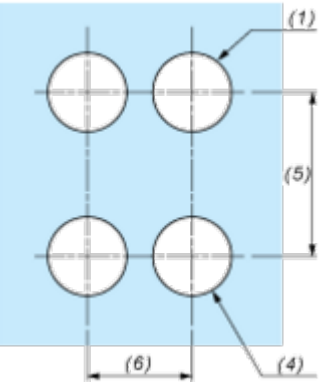  |

**(1)** Diameter on finished panel or support
**(2)** 40 mm min. / 1.57 in. min.
**(3)** 30 mm min. / 1.18 in. min.
**(4)** Ø 22.5 mm / 0.89 in. recommended (Ø 22.3 mm $_{0}^{+0.4}$ / 0.88 in. $_{0}^{+0.016}$)
**(5)** 45 mm min. / 1.78 in. min.
**(6)** 32 mm min. / 1.26 in. min.