# Product datasheet

Specifications

## Selector switch, Easy Harmony XB2, metal, black, 22mm, 3 positions, spring return from left, stay put on right, 2NO

XB2BD73C

## Main

| | |
|---|---|
| **Range of product** | Easy Harmony XB2 |
| **Product or component type** | Complete selector switch |
| **Device presentation** | Complete product |
| **Device short name** | XB2 |
| **Fixing collar material** | Zamak |
| **Head type** | Standard |

## Complementary

| | |
|---|---|
| **Bezel material** | Chromium plated metal |
| **Mounting diameter** | 22.5 mm |
| **Sale per indivisible quantity** | 1 |
| **Overvoltage category** | Class I conforming to IEC 60536 |
| **Shape of signaling unit head** | Round |
| **Type of operator** | Spring return from left stay put on right |
| **Operator profile** | Black standard handle |
| **Operating position** | Any position |
| **Operator position information** | 3 positions |
| **Contacts type and composition** | 2 NO |
| **Contact operation** | Slow-break |
| **Mechanical durability** | 1000000 cycles |
| **Compatibility code** | XB2 |
| **Device mounting** | Fixing hole - diameter: 22.5 mm |
| **Fixing center** | >= 30 x 40 mm (panel) - thickness: 1…6 mm |
| **Fixing mode** | Fixing screw beneath head recommended torque: 0.8 N.m<br>Fixing screw beneath head recommended torque: 1.0 N.m |
| **Connections - terminals** | Screw clamp terminal, <= 2 x 1.5 mm² with and without cable ends<br>Screw clamp terminal, <= 1 x 2.5 mm² with and without cable ends<br>Screw clamp terminal, >= 1 x 0.5 mm² with and without cable ends<br>Faston terminals, connection size: 6.3 mm |
| **Tightening torque** | 0.8…1.0 N.m |
| **Shape of screw head** | Cross compatible with Philips no 1 screwdriver<br>Cross compatible with pozidriv No 1 screwdriver<br>Slotted compatible with flat Ø 4 mm screwdriver<br>Slotted compatible with flat Ø 5.5 mm screwdriver |
| **Contacts material** | Silver alloy (Ag/Ni) |

Disclaimer: This documentation is not intended as a substitute for and is not to be used for determining suitability or reliability of these products for specific user applications

| | |
|---|---|
| **[Ith] conventional free air thermal current** | 10 A conforming to IEC 60947-5-1 |
| **[Ui] rated insulation voltage** | 600 V (pollution degree 3) conforming to IEC 60947-1 |
| **[Uimp] rated impulse withstand voltage** | 6 kV conforming to IEC 60947-1 |
| **[Ie] rated operational current** | 3 A at 240 V, AC-15, A600 conforming to IEC 60947-5-1<br>0.27 A at 250 V, DC-13, Q600 conforming to IEC 60947-5-1 |
| **Electrical durability** | 1000000 cycles, AC-15, 3 A at 240 V, operating rate <3600 cyc/h, load factor: 0.5 conforming to IEC 60947-5-1 appendix C<br>1000000 cycles, DC-13, 0.27 A at 250 V, operating rate <3600 cyc/h, load factor: 0.5 conforming to IEC 60947-5-1 appendix C |
| **Electrical reliability** | Λ < 10exp(-6) at 5 V and 1 mA in clean environment conforming to IEC 60947-5-4<br>Λ < 10exp(-8) at 17 V and 5 mA in clean environment conforming to IEC 60947-5-4 |
| **Width** | 40 mm |
| **Height** | 30 mm |
| **Depth** | 70 mm |
| **Product weight** | 0.1 kg |
| **Contacts usage** | Standard contacts |
| **Cap/operator or lens colour** | Black |
| **Product compatibility** | ZB2..C |
| **customizable** | No |
| **Operator profile** | Standard handle |
| **Type of operator** | Spring return for left side<br>Stay put on right |

# Environment

| | |
|---|---|
| **Short-circuit protection** | 10 A gL fuse type gG conforming to IEC 60947-5-1 |
| **IP degree of protection** | IP65 |
| **IK degree of protection** | IK06 |
| **Protective treatment** | TC/TH |
| **Ambient air temperature for storage** | -40…70 °C |
| **Ambient air temperature for operation** | -25…70 °C |
| **Standards** | IEC 60947-5-1<br>IEC 60947-5-4<br>IEC 60947-1<br>GB/T 14048.1<br>GB/T 14048.5 |
| **Product certifications** | CCC<br>CE |
| **Vibration resistance** | 5 gn (f= 2…500 Hz) conforming to IEC 60068-2-6 |
| **Shock resistance** | 30 gn (duration = 18 ms) for half sine wave acceleration conforming to IEC 60068-2-27<br>50 gn (duration = 11 ms) for half sine wave acceleration conforming to IEC 60068-2-27 |
| **Positive opening** | Without |

# Packing Units

| | |
|---|---|
| **Unit Type of Package 1** | PCE |
| **Number of Units in Package 1** | 1 |

| | |
|---|---|
| **Package 1 Height** | 5.5 cm |
| **Package 1 Width** | 7 cm |
| **Package 1 Length** | 7 cm |
| **Package 1 Weight** | 106 g |
| **Unit Type of Package 2** | S02 |
| **Number of Units in Package 2** | 50 |
| **Package 2 Height** | 15 cm |
| **Package 2 Width** | 30 cm |
| **Package 2 Length** | 40 cm |
| **Package 2 Weight** | 3.495 kg |
| **Unit Type of Package 3** | P06 |
| **Number of Units in Package 3** | 600 |
| **Package 3 Height** | 90 cm |
| **Package 3 Width** | 60 cm |
| **Package 3 Length** | 80 cm |
| **Package 3 Weight** | 78.4 kg |

## Environmental Data

Schneider Electric aims to achieve Net Zero status by 2050 through supply chain partnerships, lower impact materials, and circularity via our ongoing “Use Better, Use Longer, Use Again” campaign to extend product lifetimes and recyclability.

Environmental Data explained >

How we assess product sustainability >

### Environmental footprint

| | |
|---|---|
| Carbon footprint (kg.eq.CO2 per CR, Total Life cycle) | 3 |
| Environmental Disclosure | Product Environmental Profile |

## Use Better

### Materials and Substances

| | |
|---|---|
| Packaging without single use plastic | No |
| EU RoHS Directive | Pro-active compliance (Product out of EU RoHS legal scope) |
| SCIP Number | 9e63340a-2371-4381-8f9a-5fba0ff349a4 |
| REACh Regulation | REACh Declaration |
| China RoHS Regulation | China RoHS declaration |

## Use Again

### Repack and remanufacture

| | |
|---|---|
| Circularity Profile | No need of specific recycling operations |
| WEEE | The product must be disposed on European Union markets following specific waste collection and never end up in rubbish bins |
| Take-back | No |

## Dimensions Drawings

### Dimensions

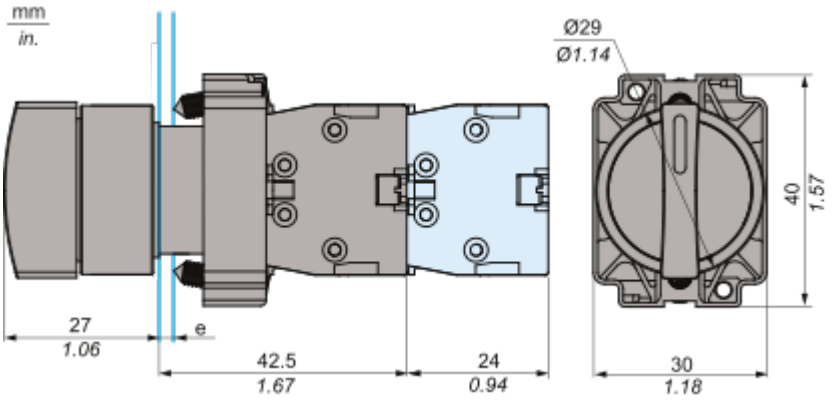


**e:** clamping thickness 1 to 6 mm / 0.04 to 0.24 in.

Mounting and Clearance

## Mounting and Clearance

### Panel cut-out

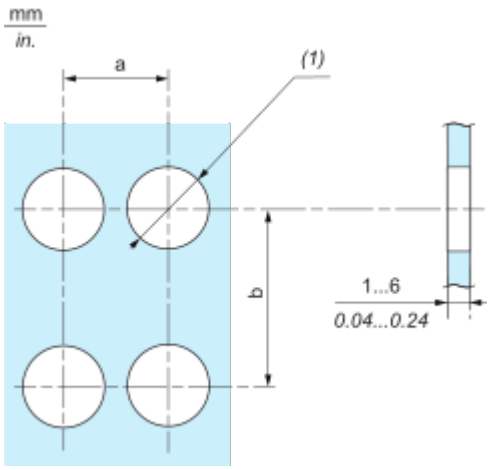


| | Connection by Screw clamp terminals | | | |
|---|---|---|---|---|
| | a in mm | a in in. | b in mm | b in in. |
| **•B2BA•C / •B2BL•C / •B2BP•C / •B2BS4•C / •B2BD•C / •B2BJ•C / •B2BG•C / •B2BW•C** | 40 | 1.57 | 30 | 1.18 |
| **•B2BC•C / •B2BS5•C / •B2BS8•C / •B2BT•C** | 40 | 1.57 | 40 | 1.57 |
| **•B2BR•C / •B2BS6•C** | 60 | 2.36 | 60 | 2.36 |

**(1)** Ø 22.5 mm / 0.89 in. recommended (Ø 22.3 mm $_{0}^{+0.4}$ / 0.88 in. $_{0}^{+0.016}$)

Technical Illustration

**Dimensions**

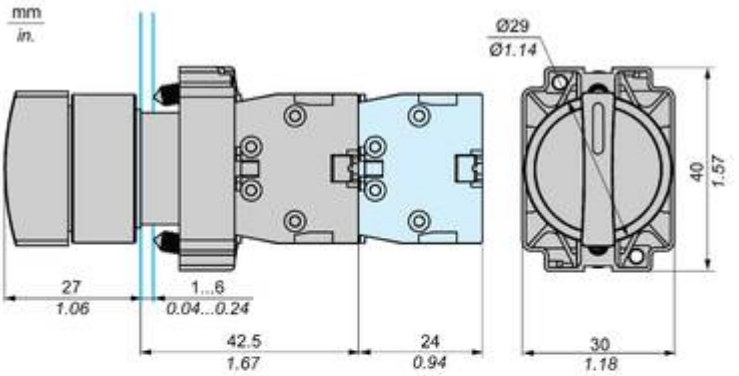


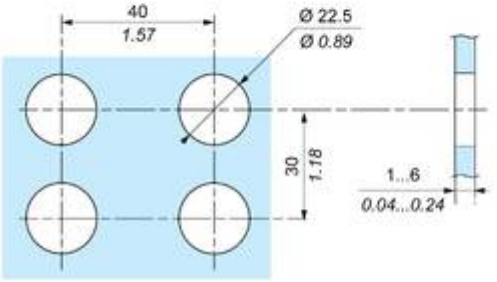

Offer Marketing Illustration

**Product benefits / Features**

Offer Marketing Illustration

## Product benefits / Features

Image of product / Alternate images

**Alternative**

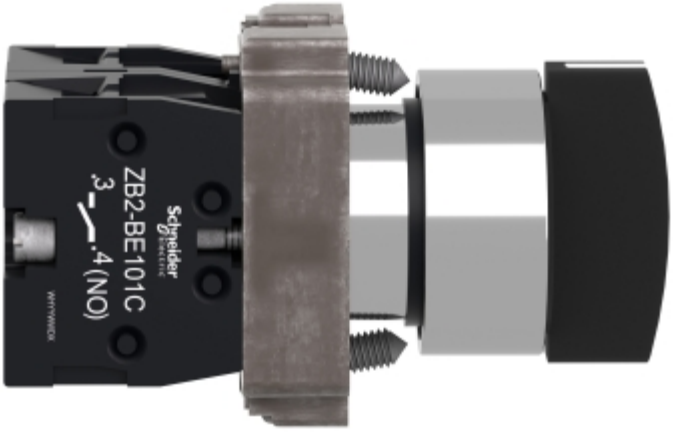
Schneider
Electric
ZB2-BE101C
3
4 (NO)

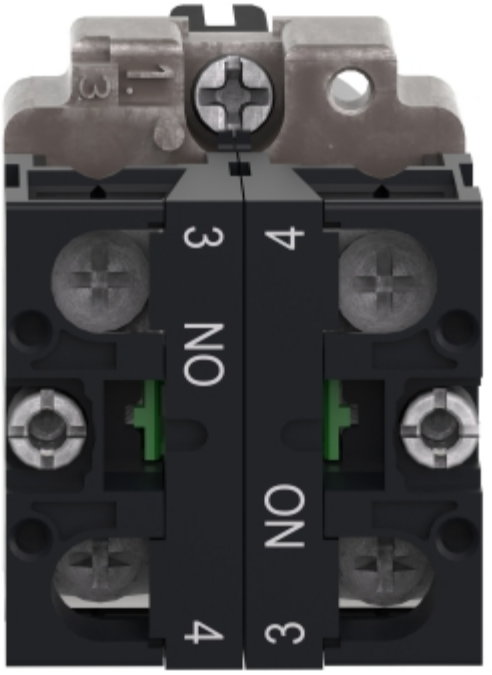
3
4
NO
NO
3
4

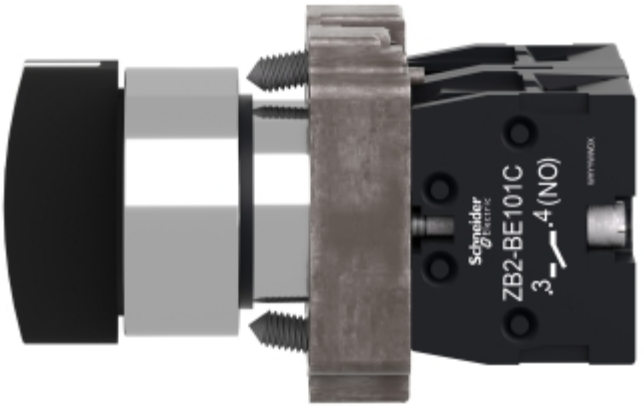
Schneider Electric
ZB2-BE101C
.3 .4 (NO)