Product datasheet

Specifications

Interface plug-in relay, 12 A, 1 CO, 220 V AC

RSB1A120M7

Main

Range of product	Harmony Electromechanical Relays
Series name	Interface relay
Product or component type	Plug-in relay
Device short name	RSB
Contacts type and composition	1 C/O
Contact operation	Standard
[Uc] control circuit voltage	220 V AC 50/60 Hz
[Ithe] conventional enclosed thermal current	12 A at -40…40 °C
status LED	Without
control type	Without push-button

Complementary

Shape of pin	Flat (PCB type)
average coil resistance	33000 Ohm network: AC at 20 °C +/- 10 %
[Ue] rated operational voltage	176...330 V AC 50/60 Hz
[Ui] rated insulation voltage	400 V conforming to IEC 60947
[Uimp] rated impulse withstand voltage	3.6 kV conforming to IEC 61000-4-5
Contacts material	Silver alloy (AgNi)
[Ie] rated operational current	12 A (AC-1/DC-1) NO conforming to IEC 6 A (AC-1/DC-1) NC conforming to IEC
Minimum switching current	10 mA
Maximum switching voltage	300 V DC conforming to IEC
minimum switching voltage	12 V
Maximum switching capacity	3000 VA/336 W
resistive rated load	12 A at 250 V AC 12 A at 28 V DC
Minimum switching capacity	120 mW at 10 mA, 12 V
Operating rate	<= 600 cycles/hour under load <= 18000 cycles/hour no-load
Mechanical durability	10000000 cycles
Electrical durability	100000 cycles, 12 A at 250 V, AC-1 NO 100000 cycles, 6 A at 250 V, AC-1 NC

Operating time	20 ms operating 20 ms reset
average coil consumption	0.75 VA AC
Drop-out voltage threshold	>= 0.15 Uc AC
Safety reliability data	B10d = 100000
Protection category	RT I
Test levels	Level A group mounting
Operating position	Any position
Net weight	0.014 kg
Sale per indivisible quantity	10
Device presentation	Complete product

Environment

Dielectric strength	1000 V AC between contacts 2500 V AC between poles 5000 V AC between coil and contact
Standards	IEC 61810-1 UL 508 CSA C22.2 No 14
Product certifications	CSA EAC UL
Ambient air temperature for storage	-40…85 °C
Vibration resistance	+/- 1 mm (f= 10…55 Hz) conforming to IEC 60068-2-6
IP degree of protection	IP40 conforming to IEC 60529
Shock resistance	10 gn (duration = 11 ms) for not operating conforming to IEC 60068-2-27 5 gn (duration = 11 ms) for in operation conforming to IEC 60068-2-27
Ambient air temperature for operation	-40…70 °C (AC)

Packing Units

Unit Type of Package 1	PCE
Number of Units in Package 1	1
Package 1 Height	2.200 cm
Package 1 Width	2.500 cm
Package 1 Length	31.000 cm
Package 1 Weight	12.000 g
Unit Type of Package 2	BB1
Number of Units in Package 2	10
Package 2 Height	2.200 cm
Package 2 Width	2.500 cm
Package 2 Length	31.000 cm
Package 2 Weight	139.000 g
Unit Type of Package 3	S01
Number of Units in Package 3	350
Package 3 Height	15.000 cm

Package 3 Width	15.000 cm
Package 3 Length	40.000 cm
Package 3 Weight	5.260 kg

Contractual warranty

Warranty	18 months

Environmental Data

Schneider Electric aims to achieve Net Zero status by 2050 through supply chain partnerships, lower impact materials, and circularity via our ongoing “Use Better, Use Longer, Use Again” campaign to extend product lifetimes and recyclability.

Environmental Data explained >

How we assess product sustainability >

Environmental footprint	
Carbon footprint (kg.eq.CO2 per CR, Total Life cycle)	7
Environmental Disclosure	Product Environmental Profile

Use Better

Materials and Substances	
Packaging made with recycled cardboard	Yes
Packaging without single use plastic	Yes
EU RoHS Directive	Pro-active compliance (Product out of EU RoHS legal scope)
SCIP Number	45b41055-6c52-408d-9c0c-5c663b810f29
REACh Regulation	REACh Declaration
China RoHS Regulation	China RoHS declaration

Use Again

Repack and remanufacture	

Circularity Profile	**No need of specific recycling operations**
WEEE	**The product must be disposed on European Union markets following specific waste collection and never end up in rubbish bins**
Take-back	**No**

Dimensions Drawings

Dimensions

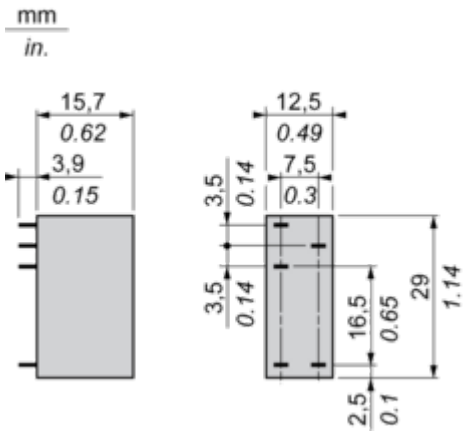

Connections and Schema

Wiring Diagram

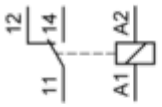

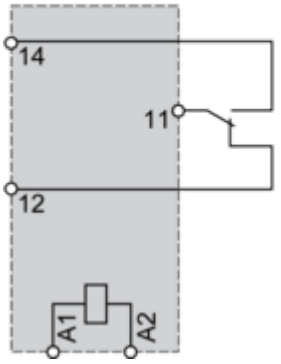

NOTE: For DC input, A1 have to be +, otherwise it would short circuit from protection module

Performance Curves

Electrical Durability of Contacts

Durability (inductive load) = durability (resistive load) x reduction coefficient.
Resistive AC load

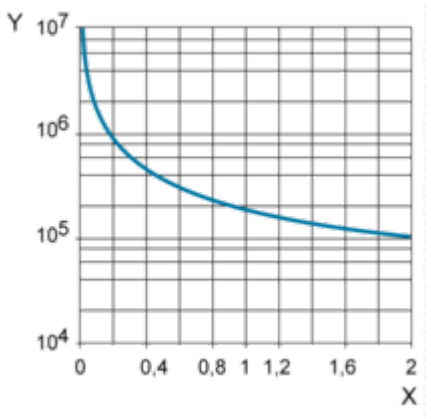

X Switching capacity (kVA)
Y Durability (Number of operating cycles)
Reduction coefficient for inductive AC load (depending on power factor cos ϕ)

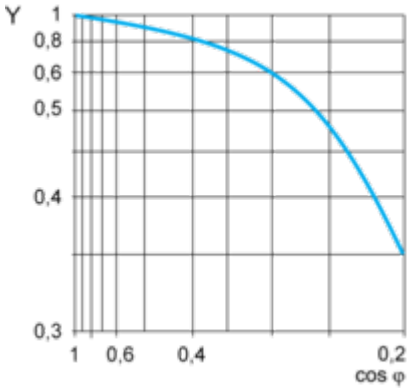

Y Reduction coefficient (A)
Maximum switching capacity on resistive DC load

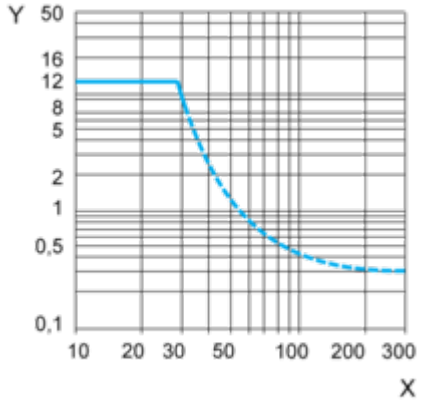

X Voltage DC
Y Current DC
Note : These are typical curves, actual durability depends on load, environment, duty cycle, etc.

Technical Illustration

Dimensions

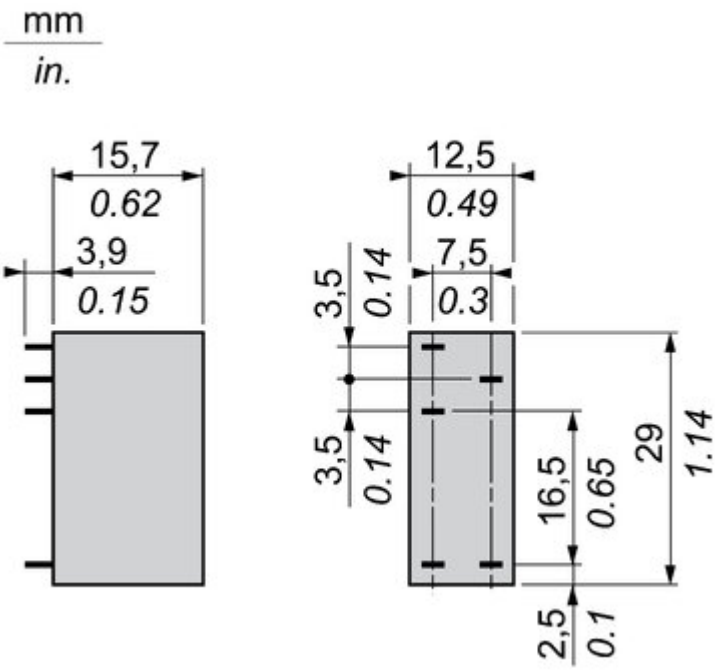

Image of product / Alternate images

Alternative

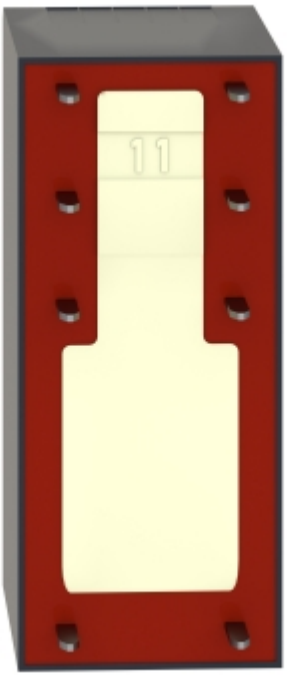

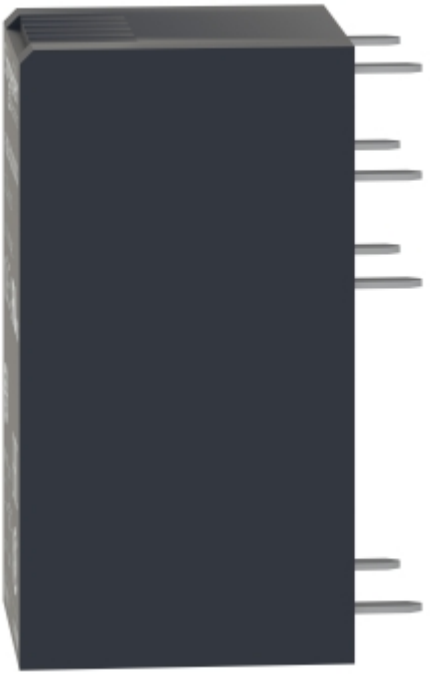

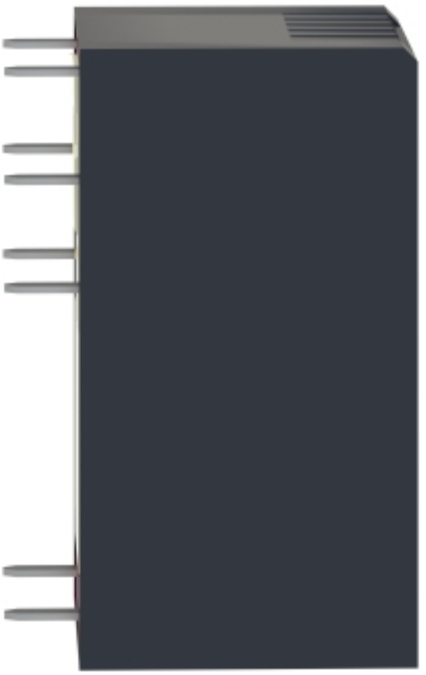


Schneider
Electric
RSB XXXXXXX
X VDC
XX XX VAC
US
XXXX
XX
XX
XX
Xxxxx
xxxxxx

Image of product in real life situation