Product data sheet

Specifications

Mini circuit breaker, QO, 200A, 2 pole, 120/240VAC, 22kA, plug in

QO2200VH

Product availability: Non-Stock - Not normally stocked in distribution facility

Price*: 1,061.00 USD

Main

Product	Miniature circuit-breaker
Range	QO
Current Rating	200 A
Voltage Rating	120/240 V AC 120 V AC
Mounting Type	Plug-in
Number of Poles	2P
Circuit Breaker Type	Standard
Ratings	HACR rated
Electrical Connection	Box lugs

Complementary

Interrupt Rating	22 kA 120/240 V AC 22 kA 120 V AC
Number of Panel Spaces	4
Wire Size	AWG 1...300 kcmil copper or aluminium
Tightening Torque	250.5 lbf.in (28.3 N.m)
Height	3.5 in (89 mm)
Width	1.5 in (38 mm)
Depth	2.9 in (74 mm)
Net Weight	2.639 lb(US) (1.197 kg)

Environment

Certifications	UL Listed CSA
Ambient Rating	104 °F (40 °C)

Ordering and shipping details

Category	US1DE2A00083
Discount Schedule	DE2A
GTIN	785901608929
Returnability	Yes
Country of origin	MX

Price is “List Price” and may be subject to a trade discount – check with your local distributor or retailer for actual price.

Disclaimer: This documentation is not intended as a substitute for and is not to be used for determining suitability or reliability of these products for specific user applications

Packing Units

Unit Type of Package 1	PCE
Number of Units in Package 1	1
Package 1 Height	4.90 in (12.446 cm)
Package 1 Width	6.80 in (17.272 cm)
Package 1 Length	7.70 in (19.558 cm)
Package 1 Weight	2.641 lb(US) (1.198 kg)

Contractual warranty

Warranty	18 months

Environmental Data

Schneider Electric aims to achieve Net Zero status by 2050 through supply chain partnerships, lower impact materials, and circularity via our ongoing “Use Better, Use Longer, Use Again” campaign to extend product lifetimes and recyclability.

Environmental Data explained >

How we assess product sustainability >

Environmental footprint	
Environmental Disclosure	Product Environmental Profile

Use Better

Materials and Substances	
Packaging made with recycled cardboard	No
Packaging without single use plastic	No
EU RoHS Directive	Compliant
SCIP Number	Af42fb01-813d-40c0-ae28-b8b3299dbc99
REACh Regulation	REACh Declaration
China RoHS Regulation	China RoHS declaration
California proposition 65	WARNING: This product can expose you to chemicals including: Cadmium and cadmium compounds, which is known to the State of California to cause cancer and birth defects or other reproductive harm. For more information go to www.P65Warnings.ca.gov

Use Again

Repack and remanufacture	
Circularity Profile	**No need of specific recycling operations**
Halogen content performance	**Halogen free product**
Take-back	**No**

Technical Illustration
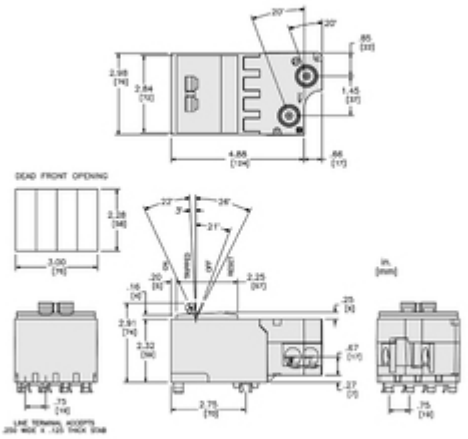
Dimensions