# Product datasheet

Specifications

Green Premium™

## EP MVS CB 1000A 50kA 3P MF ET6 fixed manual circuit breaker

MVS10N3MF6L

## Main

| | |
|---|---|
| **Range** | EasyPact |
| **Product name** | MVS10N |
| **Device short name** | MVS10N |
| **Product or component type** | Circuit breaker |
| **Device application** | Distribution |
| **poles description** | 3P |
| **Protected poles description** | 3P 3d |
| **[In] rated current** | 1000 A at 40 °C |
| **network type** | AC |
| **[Ue] rated operational voltage** | 690 V AC 50/60 Hz conforming to IEC 60947-2 |
| **Breaking capacity code** | N |
| **Suitability for isolation** | Yes conforming to IEC 60947-2 |
| **Utilisation category** | Category B |
| **Trip unit name** | ET6G |
| **Trip unit technology** | Electronic |
| **Trip unit rating** | 1000 A |

## Complementary

| | |
|---|---|
| **Network frequency** | 50/60 Hz |
| **Control type** | Manually operated |
| **Mounting mode** | Fixed |
| **Mounting support** | Rail<br>Base plate |
| **Connection position** | Vertical<br>Horizontal |
| **Location of connection** | Rear |
| **[Ui] rated insulation voltage** | 1000 V AC 50/60 Hz conforming to IEC 60947-2 |
| **[Uimp] rated impulse withstand voltage** | 12 kV conforming to IEC 60947-2 |
| **circuit breaker CT rating** | 1000 A |
| **Breaking capacity** | 50 kA Icu at 220...440 V AC 50/60 Hz conforming to IEC 60947-2 |
| **[Ics] rated service breaking capacity** | 50 kA (Ics) at 220...440 V AC 50/60 Hz conforming to IEC 60947-2 |

Excluding VAT, FCA Jabal Ali & are subject to change – check with your local distributor.

Disclaimer: This documentation is not intended as a substitute for and is not to be used for determining suitability or reliability of these products for specific user applications

| | |
|---|---|
| **Mechanical durability** | 20000 cycles (with maintenance) conforming to IEC 60947-2<br>10000 cycles (without maintenance) conforming to IEC 60947-2 |
| **Electrical durability** | Category B: 6000 cycles 440 V AC 50/60 Hz without maintenance conforming to IEC 60947-2<br>Category B: 4000 cycles 690 V AC 50/60 Hz without maintenance conforming to IEC 60947-2 |
| **Connection pitch** | 115 mm without spreader |
| **Contact position indicator** | Yes |
| **[Icm] rated short-circuit making capacity** | 105 kA (Icm) at 220...440 V AC 50/60 Hz conforming to IEC 60947-2 |
| **[Icw] rated short-time withstand current** | 50 kA (1 s) at 220...440 V AC 50/60 Hz conforming to IEC 60947-2<br>42 kA (1 s) at 690 V AC 50/60 Hz conforming to IEC 60947-2<br>25 kA (3 s) at 440/690 V AC 50/60 Hz conforming to IEC 60947-2 |
| **Trip unit protection functions** | LSIG |
| **Protection type** | Short time short-circuit protection<br>Earth fault<br>Instantaneous short-circuit protection<br>Overload protection (long time) |
| **Fault indication** | Internal fault<br>Overload<br>Short-circuit<br>Earth fault |
| **Long time pick-up adjustment type Ir** | Adjustable 9 settings |
| **Long time pick-up adjustment range** | 0.4...1 x In |
| **Long time delay adjustment type** | Adjustable 9 settings |
| **[tr] long-time delay adjustment range** | 0.5…24 s at 6 x Ir |
| **Short-time pick-up adjustment type Isd** | Adjustable 9 settings |
| **[Isd] short-time pick-up adjustment range** | 1.5...10 x Ir |
| **Short-time delay adjustment type** | Adjustable 5 settings |
| **[tsd] short-time delay adjustment range** | 100…400 ms |
| **Instantaneous pick-up adjustment type Ii** | Adjustable 9 settings |
| **instantaneous pick-up adjustment range** | 2...15 x In<br>Off |
| **ground-fault pick-up adjustment type** | Adjustable 9 settings |
| **ground-fault time delay adjustment type -tg** | Adjustable 5 settings |
| **[tg] ground-fault time delay adjustment range** | 100…400 ms |
| **[Ig] ground-fault pick-up adjustment range** | 0.2...1 x In |
| **Zone selective interlocking ZSI** | With |
| **Current sensor rating range** | 400/2000 A |
| **Maximum breaking time** | 25 ms |
| **Maximum closing response time** | 70 ms |
| **Height** | 352 mm |
| **Width** | 422 mm |
| **Depth** | 297 mm |
| **Net weight** | 40 kg |

## Environment

| | |
|---|---|
| **Standards** | IEC 60947-2 |
| **Product certifications** | IEC<br>CCC<br>CCS<br>GOST |
| **Pollution degree** | 4 conforming to IEC 60664-1 |
| **IP degree of protection** | IP40 |
| **Ambient air temperature for operation** | -5…70 °C |
| **Ambient air temperature for storage** | -40…85 °C without control unit<br>-25…85 °C with control unit |

## Packing Units

| | |
|---|---|
| **Unit Type of Package 1** | PCE |
| **Number of Units in Package 1** | 1 |
| **Package 1 Height** | 42.0 cm |
| **Package 1 Width** | 35.0 cm |
| **Package 1 Length** | 50.0 cm |
| **Package 1 Weight** | 38.0 kg |

## Contractual warranty

| | |
|---|---|
| **Warranty** | 18 months |

## Sustainability

**Green Premium™ label** is Schneider Electric's commitment to delivering products with best-in-class environmental performance. Green Premium promises compliance with the latest regulations, transparency on environmental impacts, as well as circular and low-$CO_2$ products.

**Guide to assessing product sustainability** is a white paper that clarifies global eco-label standards and how to interpret environmental declarations.

Learn more about Green Premium >

Guide to assess a product's sustainability >

Transparency RoHS/REACh

## Well-being performance

| | |
|---|---|
| Mercury Free | |
| Rohs Exemption Information | Yes |
| Pvc Free | |

## Certifications & Standards

| | |
|---|---|
| **Reach Regulation** | REACh Declaration |
| **Eu Rohs Directive** | Compliant with Exemptions |
| **China Rohs Regulation** | China RoHS declaration<br>Product out of China RoHS scope. Substance declaration for your information |
| **Environmental Disclosure** | Product Environmental Profile |
| **Circularity Profile** | End of Life Information |

Dimensions Drawings

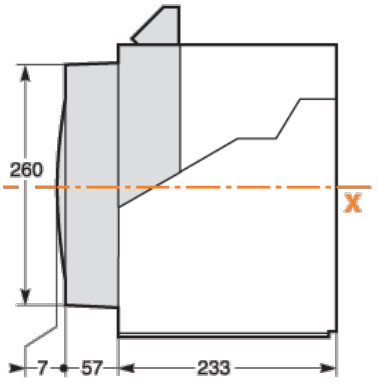


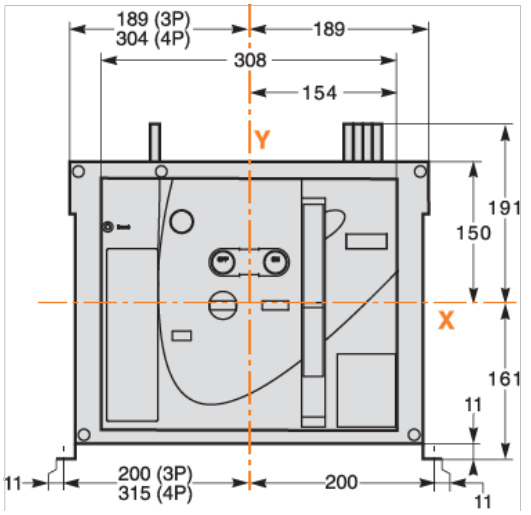

Assembly

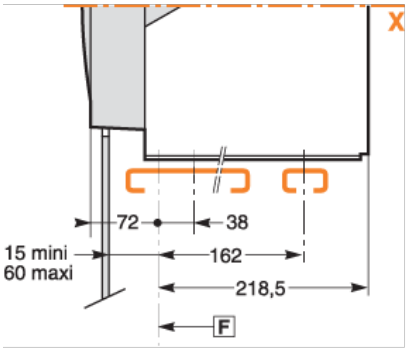
X
72
38
15 mini
60 maxi
162
218,5
F

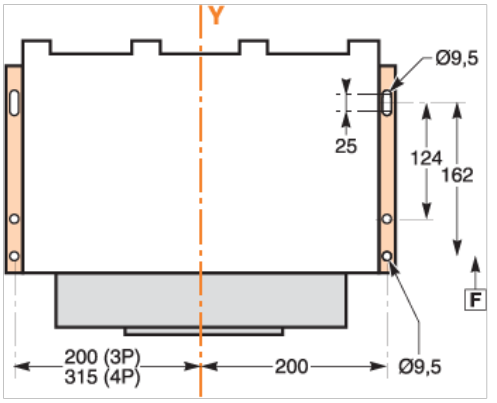
Y
Ø9,5
25
124
162
F
200 (3P)
315 (4P)
200
Ø9,5

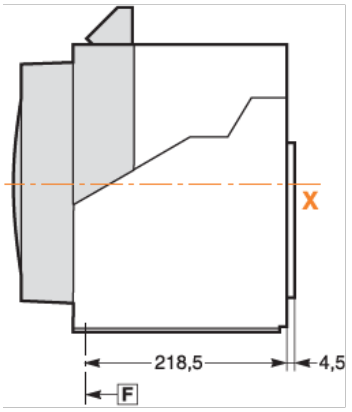
X
218,5
4,5
F

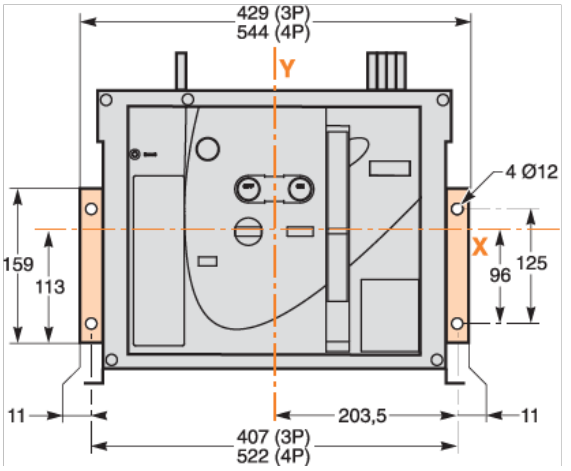
429 (3P)
544 (4P)
Y
4 Ø12
159
113
X
96
125
11
203,5
11
407 (3P)
522 (4P)

Performance Curves

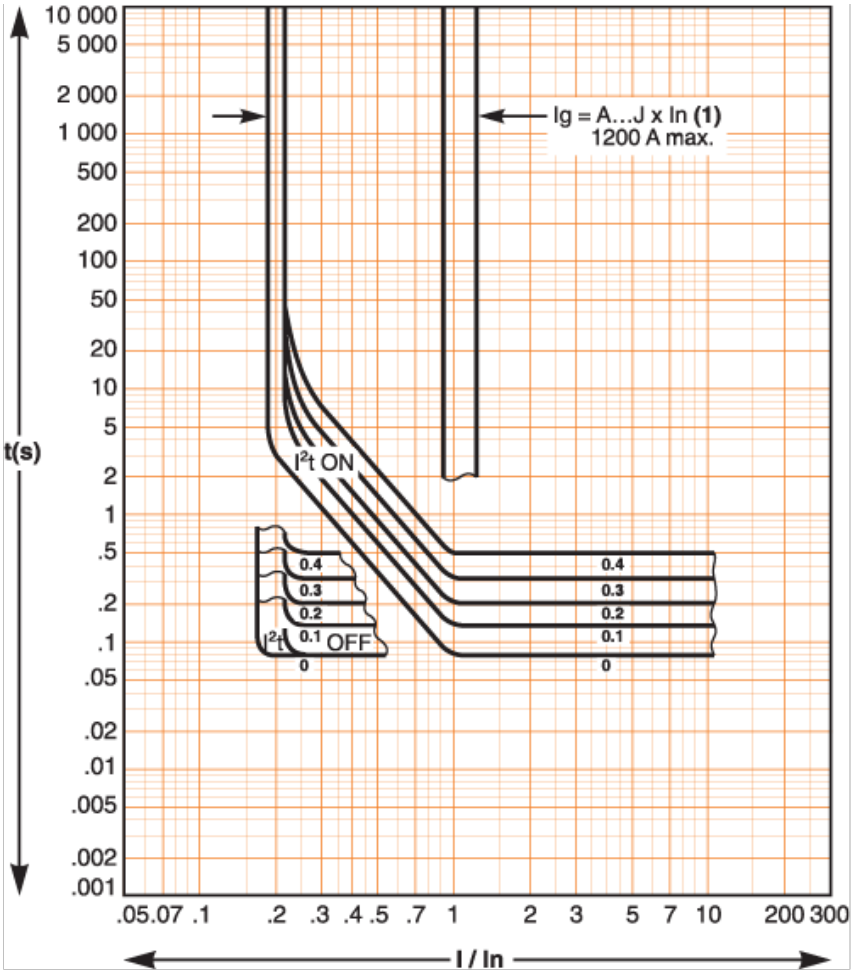


*(1)*

| Ig = In x... | A | B | C | D | E | F | G | H | J |
|---|---|---|---|---|---|---|---|---|---|
| In ⩽ 400 A | 0.3 | 0.3 | 0.4 | 0.5 | 0.6 | 0.7 | 0.8 | 0.9 | 1 |
| 400 A < In ⩽ 1000 A | 0.2 | 0.3 | 0.4 | 0.5 | 0.6 | 0.7 | 0.8 | 0.9 | 1 |
| In ⩾ 1250A | 500 | 640 | 720 | 800 | 880 | 960 | 1040 | 1120 | 1200 |

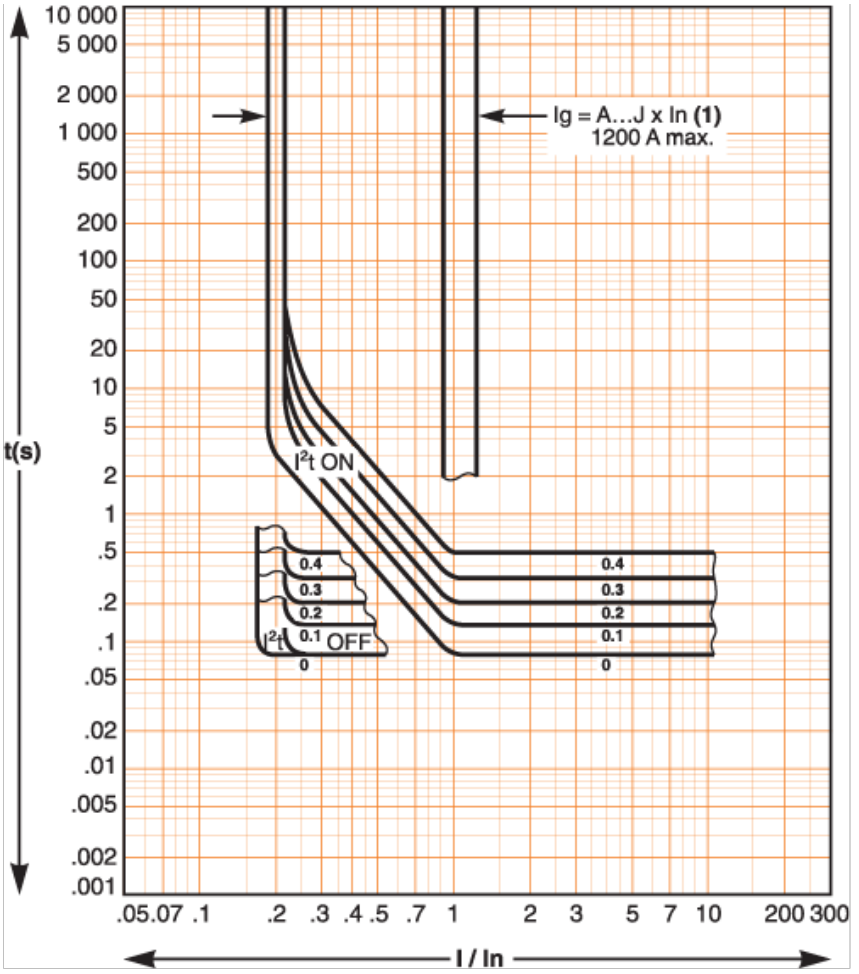


*(1)*

| Ig = In x... | A | B | C | D | E | F | G | H | J |
|---|---|---|---|---|---|---|---|---|---|
| In ≤ 400 A | 0.3 | 0.3 | 0.4 | 0.5 | 0.6 | 0.7 | 0.8 | 0.9 | 1 |
| 400 A < In ≤ 1000 A | 0.2 | 0.3 | 0.4 | 0.5 | 0.6 | 0.7 | 0.8 | 0.9 | 1 |
| In ≥ 1250A | 500 | 640 | 720 | 800 | 880 | 960 | 1040 | 1120 | 1200 |