Product datasheet

Specifications

switch disconnector EasyPact CVS630NA, 4 poles, 630 A AC22A, 500 A AC23A

LV563401

Main

Range of product	EasyPact CVS400...630
Range	EasyPact
Product name	EasyPact CVS
Device short name	CVS630NA
Product or component type	Switch disconnector
Device application	Distribution
poles description	4P
network type	AC
[Ie] rated operational current	AC-22A: 630 A AC 50/60 Hz 220/240 V AC-22A: 630 A AC 50/60 Hz 380/415 V AC-22A: 630 A AC 50/60 Hz 440 V AC-23A: 500 A AC 50/60 Hz 220/240 V AC-23A: 500 A AC 50/60 Hz 380/415 V AC-23A: 500 A AC 50/60 Hz 440 V
[Ith] conventional free air thermal current	600 A at 50 °C
[Icm] rated short-circuit making capacity	105 kA with upstream protection circuit breaker 8.5 kA switch-disconnector alone
Breaking capacity code	NA
Suitability for isolation	Yes conforming to EN 60947-3 Yes conforming to IEC 60947-3
Utilisation category	AC-22A AC-23A
Earth-leakage protection	Without

Complementary

Network frequency	50/60 Hz
Control type	Toggle
Mounting mode	Fixed
Mounting support	Backplate
Upside connection	Front
downside connection	Front
[Icw] rated short-time withstand current	6 kA during 1 s conforming to IEC 60947-3 6 kA during 3 s conforming to IEC 60947-3 2.32 kA during 20 s conforming to IEC 60947-3
Contact position indicator	Yes
Visible break	No

Disclaimer: This documentation is not intended as a substitute for and is not to be used for determining suitability or reliability of these products for specific user applications

Mechanical durability	15000 cycles conforming to IEC 60947-3
Electrical durability	AC-22A: 2500 cycles 415 V AC 50/60 Hz In conforming to IEC 60947-3 AC-23A: 2500 cycles 415 V AC 50/60 Hz In conforming to IEC 60947-3
Connection pitch	45 mm
Height	255 mm
Width	185 mm
Depth	110 mm
Net weight	8.13 kg

Environment

Standards	EN 60947-3 IEC 60947-3
Product certifications	GOST IEC
Electrical shock protection class	Class II
Pollution degree	3 conforming to IEC 60664-1
Ambient air temperature for operation	-25…70 °C
Ambient air temperature for storage	-50…85 °C

Packing Units

Unit Type of Package 1	PCE
Number of Units in Package 1	1
Package 1 Height	15.0 cm
Package 1 Width	20.0 cm
Package 1 Length	29.0 cm
Package 1 Weight	7.099 kg
Unit Type of Package 2	S04
Number of Units in Package 2	3
Package 2 Height	30.0 cm
Package 2 Width	40.0 cm
Package 2 Length	60.0 cm
Package 2 Weight	22.063 kg
Unit Type of Package 3	PAL
Number of Units in Package 3	36
Package 3 Height	80.0 cm
Package 3 Width	120.0 cm
Package 3 Length	36.0 cm
Package 3 Weight	278.28 kg

Contractual warranty

Warranty	18 months

Sustainability

Green Premium™ label is Schneider Electric's commitment to delivering products with best-in-class environmental performance. Green Premium promises compliance with the latest regulations, transparency on environmental impacts, as well as circular and low-CO_2 products.

Guide to assessing product sustainability is a white paper that clarifies global eco-label standards and how to interpret environmental declarations.

Learn more about Green Premium >

Guide to assess a product's sustainability >

Transparency RoHS/REACh

Well-being performance

Mercury Free	
Rohs Exemption Information	Yes
Pvc Free	

Certifications & Standards

Reach Regulation	REACh Declaration
Eu Rohs Directive	Compliant with Exemptions
China Rohs Regulation	China RoHS declaration Product out of China RoHS scope. Substance declaration for your information
Environmental Disclosure	Product Environmental Profile
Weee	The product must be disposed on European Union markets following specific waste collection and never end up in rubbish bins
Circularity Profile	End of Life Information

Dimensions Drawings

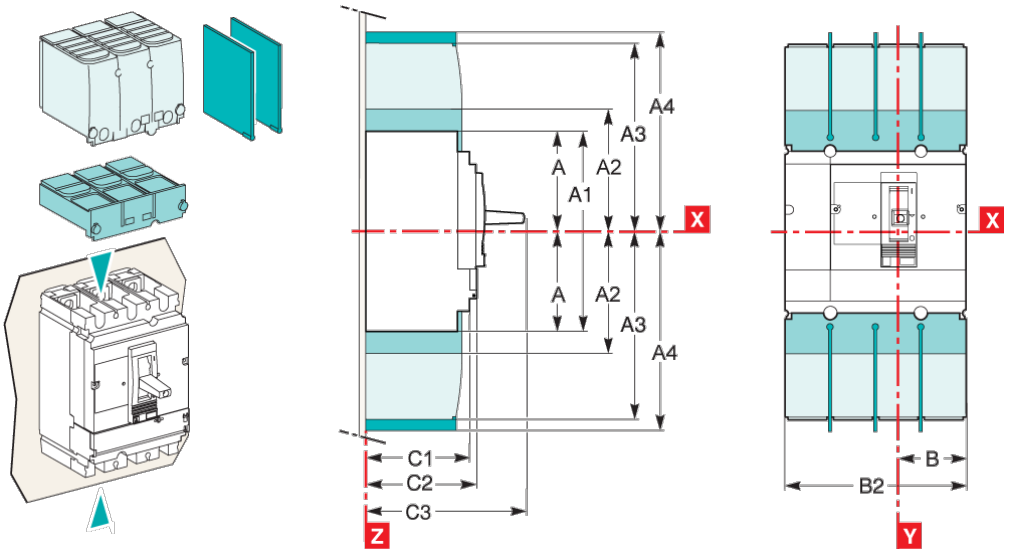

Type	A	A1	A2	A3	A4	A5	A6	A7	A8	A9	B	B1	B2	C1	C2	C3	E1
CVS100/160/250	80.5	161	94	145	178.5	155.5	236	169	220	253.5	52.5	105	140	81	86	111(2)	62.5
CVS400/630	127.5	255	142.5	200	237	227.5	355	242.5	300	337	70	140	185	95.5	110	168	100
Type	**E2**	**E3**	**E4**	**E5**	**E6**	**E7**	**E8**	**F1**	**F2**	**F3**	**G1**	**G2**	**G3**	**G4**	**G5**	**ØT**	**U**
CVS100/160/250	125	70	140	137.5	200	145	215	35	17.5	70	95	75	13.5	23	17.5	24	y 32
CVS400/630	200	113.5	227	200	300	213.5	327	45	22.5	90	-	-	-	-	-	32	y 35

(2) C3=126mm for EasyPact CVS250B/F.

Assembly

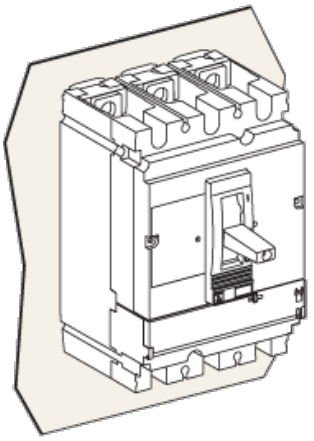

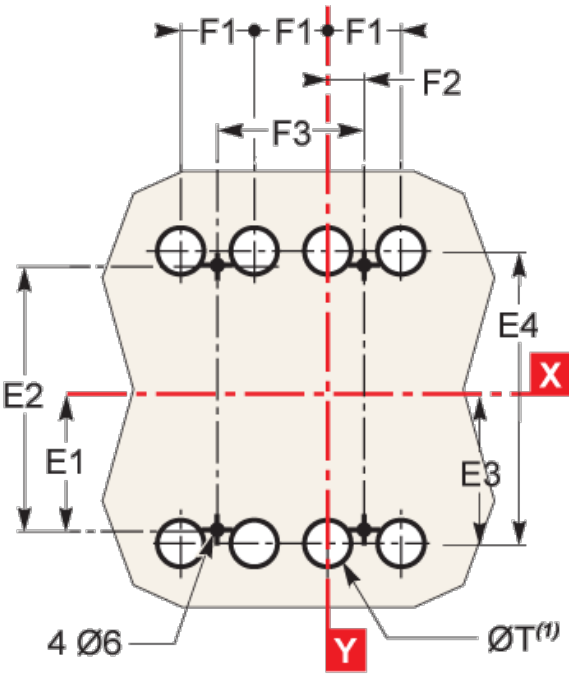

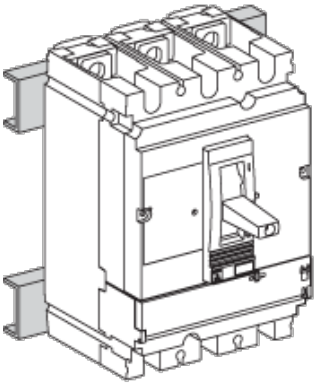

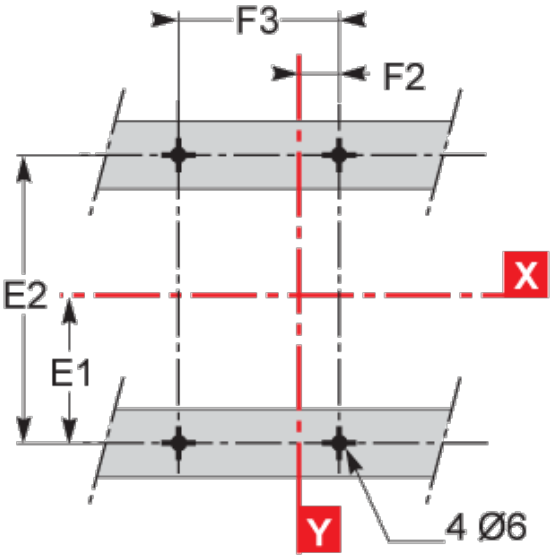

Type	A	A1	A2	A3	A4	A5	A6	A7	A8	A9	B	B1	B2	C1	C2	C3	E1
CVS100/160/250	80.5	161	94	145	178.5	155.5	236	169	220	253.5	52.5	105	140	81	86	111(2)	62.5
CVS400/630	127.5	255	142.5	200	237	227.5	355	242.5	300	337	70	140	185	95.5	110	168	100
Type	**E2**	**E3**	**E4**	**E5**	**E6**	**E7**	**E8**	**F1**	**F2**	**F3**	**G1**	**G2**	**G3**	**G4**	**G5**	**ØT**	**U**
CVS100/160/250	125	70	140	137.5	200	145	215	35	17.5	70	95	75	13.5	23	17.5	24	y 32
CVS400/630	200	113.5	227	200	300	213.5	327	45	22.5	90	-	-	-	-	-	32	y 35

(2) C3=126mm for EasyPact CVS250B/F.