Product datasheet

Specifications

Green Premium™

circuit breaker EasyPact CVS400N, 50 kA at 415 VAC, 400 A rating ETS 2.3 electronic trip unit, 4P 4d

LV540511

Main

Range	EasyPact
Range of product	EasyPact CVS400...630
Product name	EasyPact CVS
Device short name	CVS400N
product or component type	Circuit breaker
Device application	Distribution
poles description	4P
Protected poles description	3D + N/2 4D 3D
Earth leakage protection (Vigi add on)	Without
[In] rated current	400 A at 40 °C
Network type	AC
Utilisation category	Category A
[Icu] Breaking capacity	70 kA Icu at 220/240 V AC 50/60 Hz conforming to IEC 60947-2 50 kA Icu at 380/415 V AC 50/60 Hz conforming to IEC 60947-2 42 kA Icu at 440 V AC 50/60 Hz conforming to IEC 60947-2
Trip unit name	ETS 2.3
Trip unit technology	Electronic
Trip unit rating	400 A at 40 °C
Protection type	Short time short-circuit protection Instantaneous short-circuit protection Overload protection (long time)

Complementary

[Uimp] rated impulse withstand voltage	8 kV conforming to EN/IEC 60947-2
Network frequency	50/60 Hz
Breaking capacity code	N
[Ics] rated service breaking capacity	70 kA at 220/240 V AC 50/60 Hz conforming to IEC 60947-2 50 kA at 380/415 V AC 50/60 Hz conforming to IEC 60947-2 32 kA at 440 V AC 50/60 Hz conforming to IEC 60947-2
Neutral position	Left
Mechanical durability	15000 cycles
Electrical durability	6000 cycles 415 V In conforming to IEC 60947-2
Trip unit protection functions	LSoI

Disclaimer: This documentation is not intended as a substitute for and is not to be used for determining suitability or reliability of these products for specific user applications

Control type	Toggle
Neutral protection setting	1 x Ir (4D) 0.5 x Ir (3D + N/2)
Long time pick-up adjustment type Ir	Adjustable 9 settings
Long time pick-up adjustment range	160…400 A
Long time delay adjustment type	Fixed
[tr] long-time delay adjustment range	5.5 s at 7.2 x Ir 8 s at 6 x Ir 200 s at 1.5 x Ir
thermal memory	Yes
Short-time pick-up adjustment type Isd	Adjustable 9 settings
[Isd] short-time pick-up adjustment range	1.5...10 x Ir
Short-time delay adjustment type	Fixed
Instantaneous pick-up adjustment type Ii	Fixed
instantaneous pick-up adjustment range	11 x In
Contact position indicator	Yes
mounting support	Backplate
mounting mode	Fixed
Upside connection	Front
downside connection	Front
Connections - terminals	Screw connection
Connection pitch	45 mm
Compatibility code	CVS400
Width	185 mm
Depth	110 mm
Height	255 mm
net weight	6.3 kg

Environment

Standards	IEC 60947-2 EN 60947-2
Product certifications	GOST IEC
Electrical shock protection class	Class II
Pollution degree	3 conforming to IEC 60664-1
IP degree of protection	IP40
Ambient air temperature for operation	-25…70 °C
Ambient air temperature for storage	-50…85 °C

Packing Units

Unit Type of Package 1	PCE
Number of Units in Package 1	1

Package 1 Height	15.5 cm
Package 1 Width	20.5 cm
Package 1 Length	29 cm
Package 1 Weight	8.23 kg
Unit Type of Package 2	S04
Number of Units in Package 2	3
Package 2 Height	30 cm
Package 2 Width	40 cm
Package 2 Length	60 cm
Package 2 Weight	25.19 kg
Unit Type of Package 3	PAL
Number of Units in Package 3	24
Package 3 Height	107.2 cm
Package 3 Width	60 cm
Package 3 Length	80 cm
Package 3 Weight	204.72 kg

Sustainability

Green Premium™ label is Schneider Electric's commitment to delivering products with best-in-class environmental performance. Green Premium promises compliance with the latest regulations, transparency on environmental impacts, as well as circular and low-CO_2 products.

Guide to assessing product sustainability is a white paper that clarifies global eco-label standards and how to interpret environmental declarations.

Learn more about Green Premium >

Guide to assess a product's sustainability >

Transparency RoHS/REACh

Well-being performance

Mercury Free

Rohs Exemption Information Yes

Certifications & Standards

Reach Regulation	REACh Declaration
Eu Rohs Directive	Compliant with Exemptions
China Rohs Regulation	China RoHS declaration Product out of China RoHS scope. Substance declaration for your information
Environmental Disclosure	Product Environmental Profile
Weee	The product must be disposed on European Union markets following specific waste collection and never end up in rubbish bins
Circularity Profile	End of Life Information

Dimensions Drawings

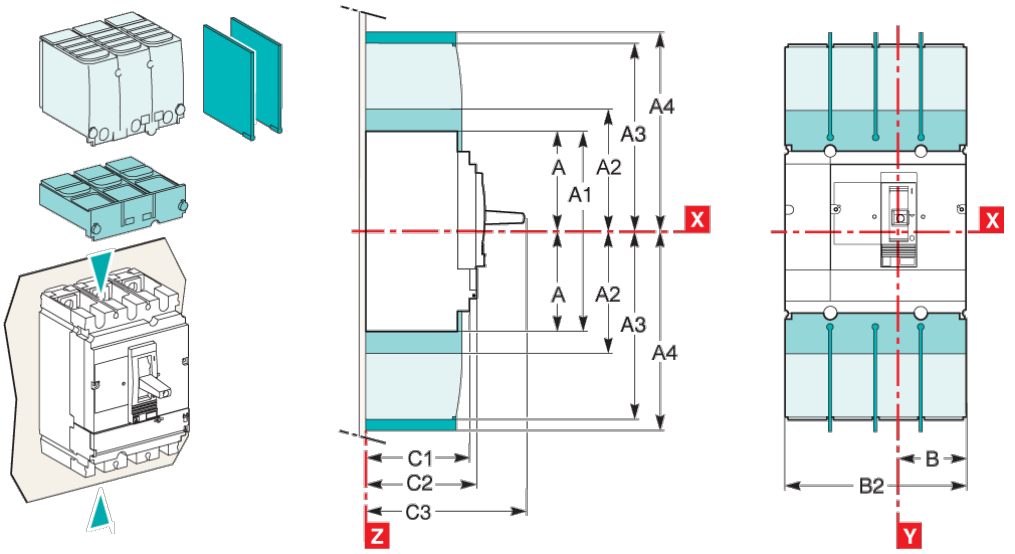

Type	A	A1	A2	A3	A4	A5	A6	A7	A8	A9	B	B1	B2	C1	C2	C3	E1
CVS100/160/250	80.5	161	64	145	170.5	155.5	236	169	220	253.5	52.5	105	140	91	66	111[a]	62.5
CVS400/630	127.5	255	142.5	200	237	227.5	355	242.5	300	337	70	140	185	95.5	110	168	100
Type	**E2**	**E3**	**E4**	**E5**	**E6**	**E7**	**E8**	**F1**	**F2**	**F3**	**G1**	**G2**	**G3**	**G4**	**G5**	**ØT**	**U**
CVS100/160/250	125	70	140	137.5	200	145	215	35	17.5	70	55	75	13.5	33	17.5	24	y 32
CVS400/630	200	113.5	227	200	300	213.5	327	45	22.5	90	-	-	-	-	-	32	y 35

[a] C3=126mm for EasyPact CVS250N/F.

Assembly

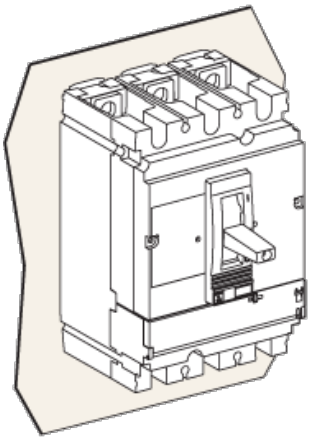

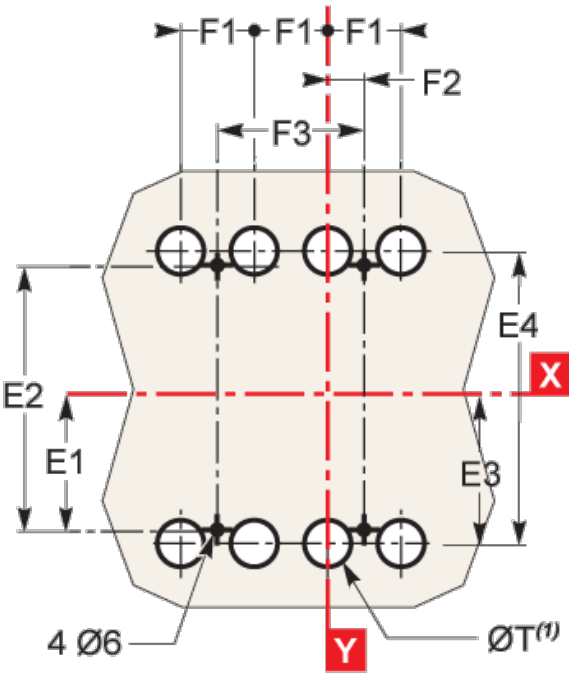

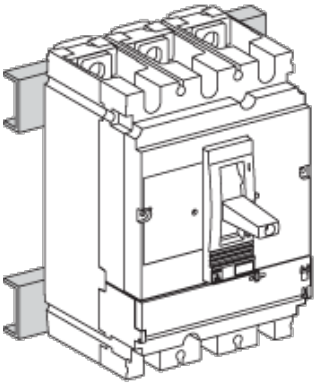

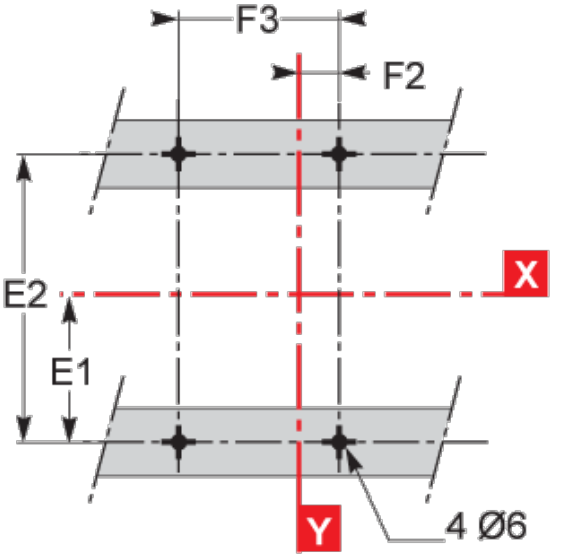

Type	A	A1	A2	A3	A4	A5	A6	A7	A8	A9	B	B1	B2	C1	C2	C3	E1
CVS100/160/250	80.5	161	84	145	170.5	155.5	226	169	220	253.5	52.5	105	140	91	66	111(2)	62.5
CVS400/630	127.5	255	142.5	200	237	227.5	355	242.5	300	337	70	140	185	95.5	110	168	100
Type	**E2**	**E3**	**E4**	**E5**	**E6**	**E7**	**E8**	**F1**	**F2**	**F3**	**G1**	**G2**	**G3**	**G4**	**G5**	**ØT**	**U**
CVS100/160/250	125	70	140	137.5	200	145	215	35	17.5	70	55	75	13.5	33	17.5	24	y 32
CVS400/630	200	113.5	227	200	300	213.5	327	45	22.5	90	-	-	-	-	-	32	y 35

(2) C3=126mm for EasyPact CVS2500/F.
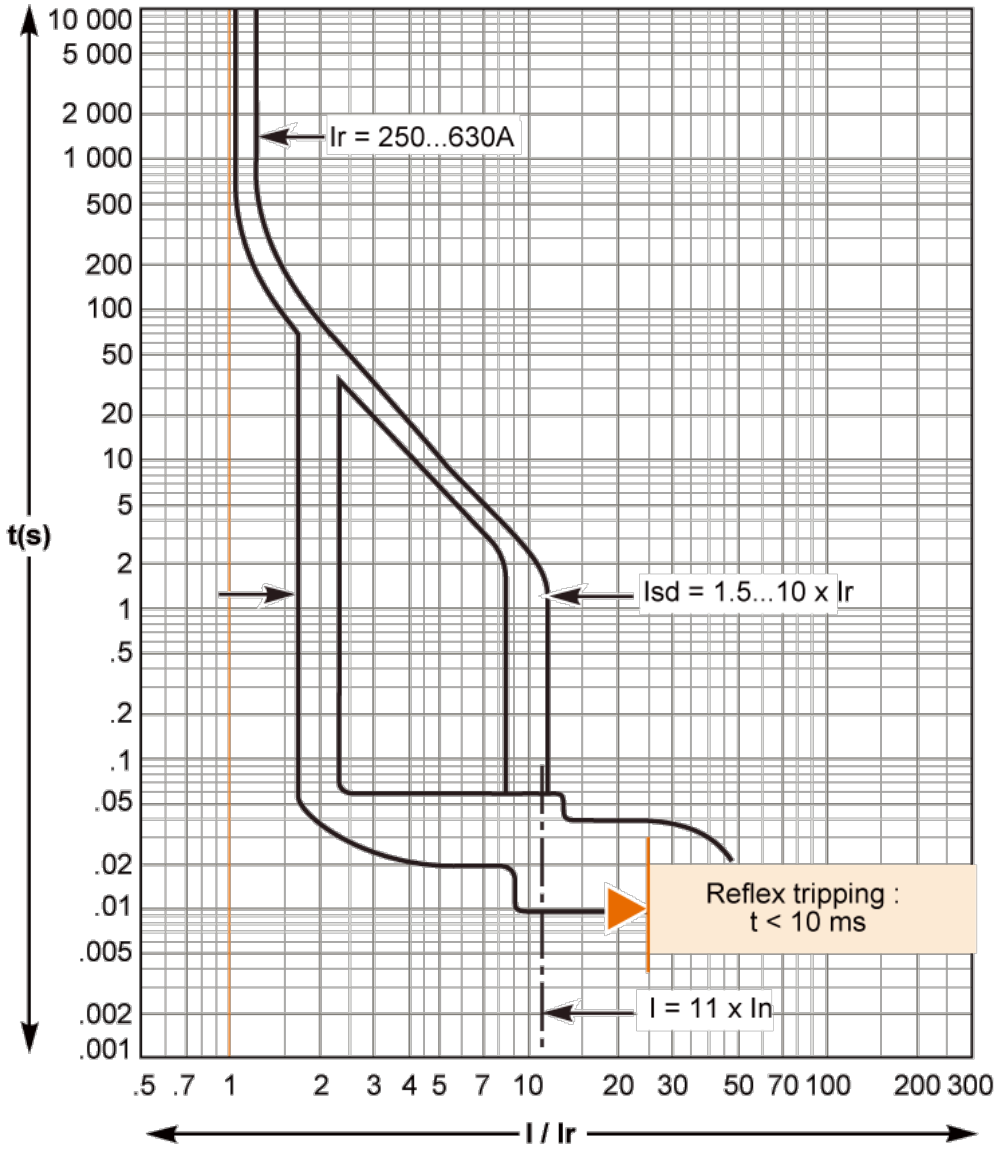
Performance Curves