Product datasheet

Specifications

10w Industrial FPM, Harmony FP6, WXGA, 16M colors, PCAP Multi Touch (2 points) with optimized noise filter, DVI, USB Type B, 24V DC

HMIFP6500WCD

EAN Code: 3606481808233

Main

Range of product	Harmony FP6
Product or component type	Touch panel screen
Operating system	Windows 10 (version 1809)

Complementary

display size	10.1 inch
Aspect ratio	16:9
Display type	LED Colour TFT LCD
display resolution	1280 x 800 pixels WXGA
Display colour	16 million colours
Touch panel	Multi-touch projected capactive technology (PCT)
Pixel resolution	1280 x 800
Backlight lifespan	50000 hours at 25 °C
Integrated connection type	DVI-D video port USB type B USB 2.0
[Us] rated supply voltage	24 V DC
Power consumption in W	12.4 W
Inrush current	30 A
Type of cooling	Natural
Device mounting	Panel mounting Direct mounting VESA
Cut-out dimensions	255 (+ 1/- 0) x 185 (+ 1/- 0) mm
Width	268.5 mm
Depth	67.5 mm
Height	198.5 mm
Net weight	3.2 kg

Environment

Standards	CE FCC part 15 UL 61010-2-201 CSA C22.2 No 61010-2-201

Disclaimer: This documentation is not intended as a substitute for and is not to be used for determining suitability or reliability of these products for specific user applications

Product certifications	RCM KC UKCA DNV (except 22" wide display) ATEX zone 2 ATEX zone 22 dust CULus Class 1 Division 2 IECEx zone 2 (DC model, front USB cover must be locked with screw) IECEx zone 22 (DC model, front USB cover must be locked with screw)
IP degree of protection	IP66f IP67f Type 1 Type 4X Type 12 Type 13
Ambient air temperature for operation	0…55 °C
Ambient air temperature for storage	-20…60 °C
Relative humidity	10…90 % for without condensation
Pollution degree	2
Operating altitude	2000 m
Vibration resistance	1 gn (f = 5…9 Hz) - single amplitude - conforming to IEC 61131-2 1 gn (f = 9…150 Hz) - fixed amplitude - conforming to IEC 61131-2 1 gn - X, Y, Z directions for 10 cycles (approx. 100 min) - conforming to IEC 61131-2
Shock resistance	147 m/s² conforming to IEC 61131-2 147 m/s² 3 shocks in each direction X, Y and Z
Electromagnetic compatibility	Electrostatic discharge immunity test 6 kV contact discharge conforming to IEC 61000-4-2 level 3 Electrostatic discharge immunity test 8 kV air discharge conforming to IEC 61000-4-2 level 3 Electrical fast transient/burst immunity test 2 kV power ports conforming to IEC 61000-4-4 Electrical fast transient/burst immunity test 1 kV signal ports conforming to IEC 61000-4-4

Packing Units

Unit Type of Package 1	PCE
Number of Units in Package 1	1
Package 1 Height	15 cm
Package 1 Width	55 cm
Package 1 Length	82 cm
Package 1 Weight	2.45 kg

Contractual warranty

Warranty	18 months

Sustainability

Green Premium™ label is Schneider Electric's commitment to delivering products with best-in-class environmental performance. Green Premium promises compliance with the latest regulations, transparency on environmental impacts, as well as circular and low-CO_2 products.

Guide to assessing product sustainability is a white paper that clarifies global eco-label standards and how to interpret environmental declarations.

Learn more about Green Premium >

Guide to assess a product's sustainability >

Transparency RoHS/REACh

Well-being performance

Mercury Free

Rohs Exemption Information	Yes

Certifications & Standards

Reach Regulation	REACh Declaration
Eu Rohs Directive	Pro-active compliance (Product out of EU RoHS legal scope)
China Rohs Regulation	China RoHS declaration
Environmental Disclosure	Product Environmental Profile
Circularity Profile	End of Life Information

Dimensions Drawings

Dimensions

External Dimensions

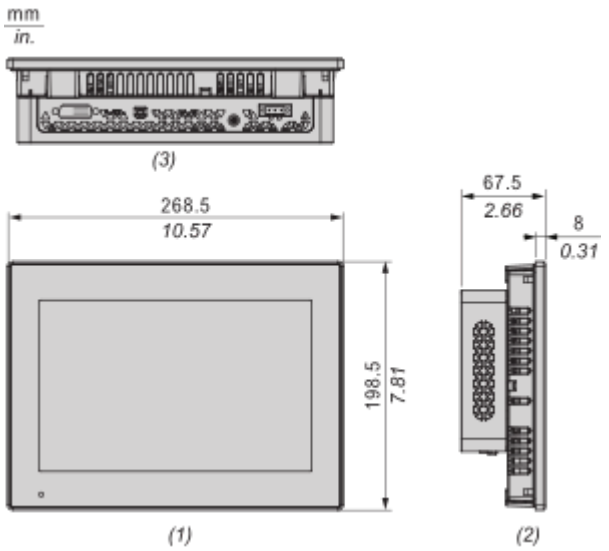

(1): Front
(2): Left
(3): Bottom

Connections and Schema

Mounting

Panel Cut Dimension

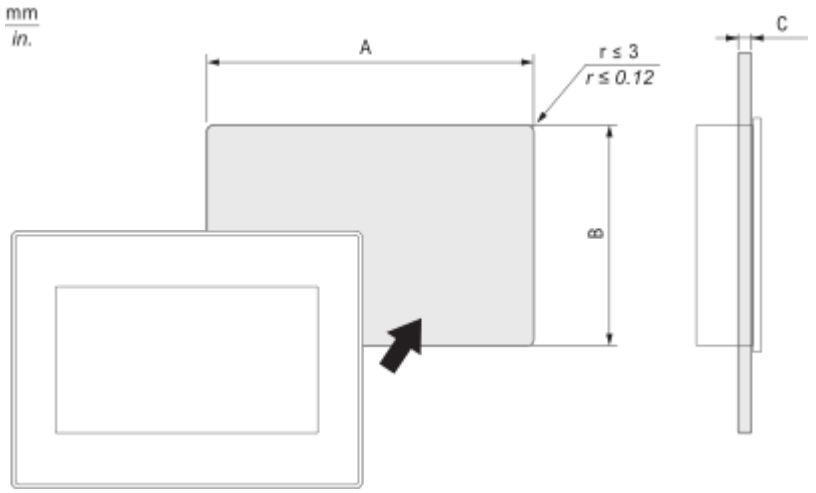

A		B		C	
mm	in.	mm	in.	mm	in.
255 (+1, -0)	10.04 (+0.04, -0)	185 (+1, -0)	7.28 (+0.04, -0)	1.6...5	0.06...0.2

Mounting Orientation

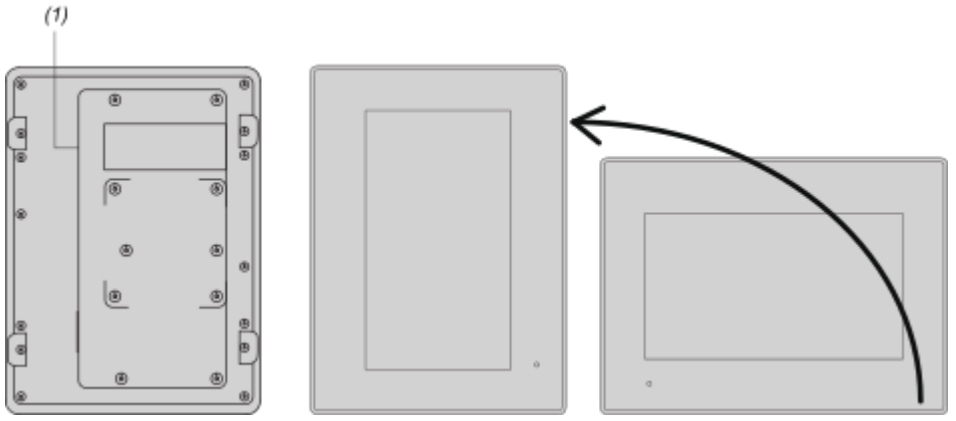

(1): Power connector
Note: For portrait orientation mounting, make sure the screen editing software supports the function.

Mounting Angle

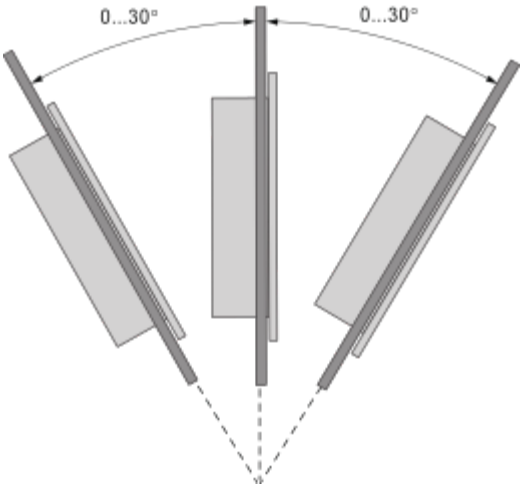
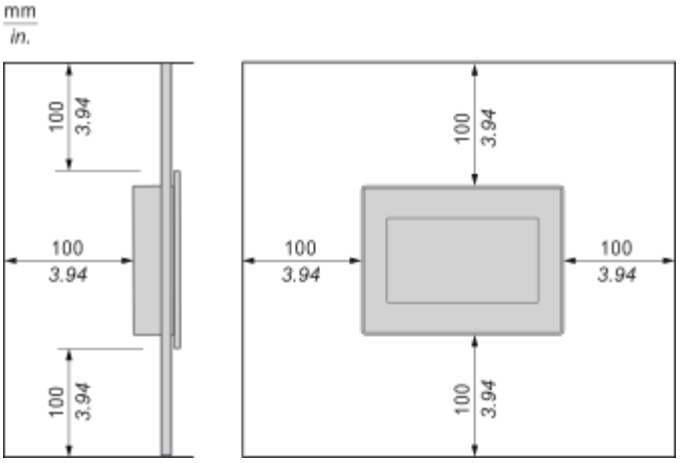
Clearance