Product data sheet

Specifications

Adaptor plate, TeSys GV7, mounting on door, IP43, for direct rotary handle

GV7AP05

Product availability: Stock - Normally stocked in distribution facility

Price*: 14.00 USD

Main

Range	TeSys
Device Short Name	GV7AP
Product Or Component Type	Adaptor plate
Range Compatibility	TeSys TeSys GV5 motor circuit breaker TeSys TeSys GV7 motor circuit breaker
Accessory / Separate Part Category	Mounting accessory

Complementary

Mounting Support	Rotary handle enclosure door
Ip Degree Of Protection	IP43
Net Weight	0.22 lb(US) (0.1 kg)

Ordering and shipping details

Category	US10I1122366
Discount Schedule	0I11
Gtin	3389110617955
Returnability	No
Country Of Origin	FR

Packing Units

Unit Type Of Package 1	PCE
Number Of Units In Package 1	1
Package 1 Height	5.12 in (13.0 cm)
Package 1 Width	5.12 in (13.0 cm)
Package 1 Length	1.57 in (4.0 cm)
Package 1 Weight	0.99 oz (28.0 g)

Contractual warranty

Warranty	18 months

Price is “List Price” and may be subject to a trade discount – check with your local distributor or retailer for actual price.

Disclaimer: This documentation is not intended as a substitute for and is not to be used for determining suitability or reliability of these products for specific user applications

Sustainability

Green Premium™ label is Schneider Electric's commitment to delivering products with best-in-class environmental performance. Green Premium promises compliance with the latest regulations, transparency on environmental impacts, as well as circular and low-CO_2 products.

Guide to assessing product sustainability is a white paper that clarifies global eco-label standards and how to interpret environmental declarations.

Learn more about Green Premium >

Guide to assess a product's sustainability >

Transparency RoHS/REACh

Well-being performance

Mercury Free

Rohs Exemption Information Yes

Certifications & Standards

Reach Regulation	REACh Declaration
Eu Rohs Directive	Compliant with Exemptions
China Rohs Regulation	China RoHS declaration Product out of China RoHS scope. Substance declaration for your information.
Environmental Disclosure	Product Environmental Profile
Weee	The product must be disposed on European Union markets following specific waste collection and never end up in rubbish bins.
Circularity Profile	End of Life Information
California Proposition 65	WARNING: This product can expose you to chemicals including: Lead and lead compounds, which is known to the State of California to cause cancer and birth defects or other reproductive harm. For more information go to www.P65Warnings.ca.gov

Dimensions Drawings

Direct Rotary Handle GV7AP03 or GV7AP04 with Conversion Accessory GV7AP05

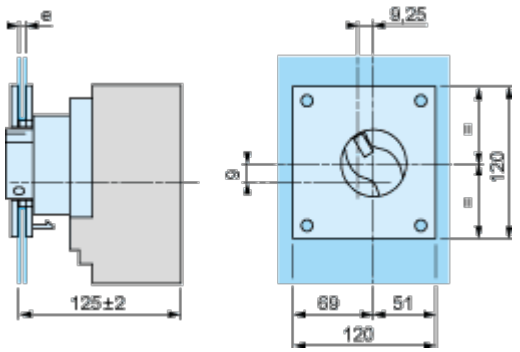

Front face cut-out

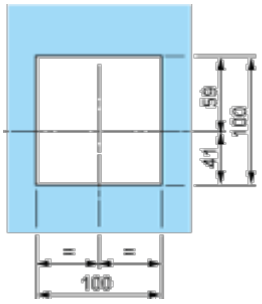

Enclosure viewed from top

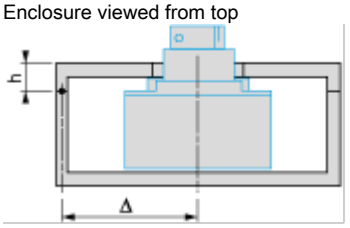

Door cut-outs require a minimum distance between the centre of the circuit breaker and the door hinge point Δ ≥ 100 + (h x 5)