Product datasheet

Specifications

Green Premium™

Regulated Power Supply, 100-240V AC, 12V 6.2 A, single phase, Optimized

ABLS1A12062

Main

Range Of Product	Modicon Power Supply
Product Or Component Type	Power supply
Power Supply Type	Regulated switch mode
Variant Option	Optimized
Enclosure Material	Plastic
Nominal Input Voltage	100...240 V AC single phase 100...240 V AC phase to phase 140...340 V DC
Rated Power In W	75 W
Output Voltage	12 V DC
Power Supply Output Current	6.25 A

Complementary

Input Voltage Limits	85...264 V AC without temperature derating 120...375 V DC without temperature derating 85…120 V DC with temperature derating
Nominal Network Frequency	50…60 Hz
Network System Compatibility	TN TT IT
Maximum Leakage Current	1 mA 240 V AC
Input Protection Type	Integrated fuse (not interchangeable) 5 A External protection (recommended) 20 A Curve C External protection (recommended) 13 A Curve B External protection (recommended) 10 A Curve C
Inrush Current	40.0 A at 115 V 80.0 A at 230 V
Power Factor	0.55 at 115 V AC 0.45 at 230 V AC
Efficiency	87 % at 230 V AC
Output Voltage Adjustment	11...14 V
Power Dissipation In W	16 W
Current Consumption	< 1.8 A 115 V AC < 1 A 230 V AC < 0.8 A 140 V DC
Turn-On Time	< 1.2 s
Holding Time	> 20 ms 115 V AC > 40 ms 230 V AC

Disclaimer: This documentation is not intended as a substitute for and is not to be used for determining suitability or reliability of these products for specific user applications

Startup With Capacitive Loads	5000 µF
Residual Ripple	< 120 mV
Meantime Between Failure [Mtbf]	700000 h at 25 °C, full load conforming to SR 332
Output Protection Type	Against overload and short-circuits, protection technology: automatic reset Against over temperature, protection technology: manual reset Against overvoltage, protection technology: manual reset
Connections - Terminals	Screw connection: 0.5...2.5 mm², (AWG 20...AWG 14) for output Screw connection: 0.75...2.5 mm², (AWG 18...AWG 14) for input
Line And Load Regulation	< 0.5 % at 0 to 100 % load at 25 °C < 1 % at full voltage range in line at 25 °C
Status Led	1 LED (green) output voltage
Depth	102 mm
Height	123.6 mm
Width	27 mm
Net Weight	0.22 kg
Output Coupling	Parallel Serial
Mounting Support	Top hat type TH35-15 rail conforming to IEC 60715 Top hat type TH35-7.5 rail conforming to IEC 60715 Double-profile DIN rail
Supply	SELV conforming to IEC 60950-1 SELV conforming to IEC 60204-1 SELV conforming to IEC 60364-4-41
Dielectric Strength	3000 V AC with input to output
Service Life	10 year(s)
Overvoltage Category	II

Environment

Standards	IEC 62368-1 EN/IEC 61010-1 EN 61010-2-201 EN/IEC 61204-3 IEC 61000-6-1 IEC 61000-6-2 IEC 61000-6-3 IEC 61000-6-4 IEC 61000-3-2 EN 61000-3-3 UL 62368-1 UL 61010-1 UL 61010-2-201 CSA C22.2 No 62368-1 CSA C22.2 No 61010-1 CSA C22.2 No 61010-2-201 EN/IEC 62368-1
Product Certifications	CE CUL listed CUL recognized RCM CB Scheme EAC KC NEC: class 2
Operating Altitude	< 5000 m overvoltage category III
Shock Resistance	150 m/s² for 11 ms
Ip Degree Of Protection	IP20

Ambient Air Temperature For Operation	-20…-10 °C with current derating of 1 % per °C mounting position A < 2000 m -10…40 °C without derating mounting position A 115 V AC < 2000 m -10…50 °C without derating mounting position A 230 V AC < 2000 m 40…70 °C with current derating of 1.67 % per °C mounting position A 115 V AC < 2000 m 50…70 °C with current derating of 2.5 % per °C mounting position A 230 V AC < 2000 m
Electrical Shock Protection Class	Class I
Pollution Degree	2
Vibration Resistance	3 mm (f= 2…9 Hz) conforming to IEC 60068-2-6 10 m/s² (f= 9…200 Hz) conforming to IEC 60068-2-6
Electromagnetic Immunity	Immunity to electrostatic discharge - test level: 8 kV (contact discharge) conforming to IEC 61000-4-2 Immunity to electrostatic discharge - test level: 15 kV (air discharge) conforming to IEC 61000-4-2 Immunity to conducted RF disturbances - test level: 15 V/m (80 MHz...2 GHz) conforming to IEC 61000-4-3 Immunity to conducted RF disturbances - test level: 5 V/m (2...2.7 GHz) conforming to IEC 61000-4-3 Immunity to conducted RF disturbances - test level: 5 V/m (2.7...6 GHz) conforming to IEC 61000-4-3 Immunity to fast transients - test level: 4 kV (on input-output) conforming to IEC 61000-4-4 Surge immunity test - test level: 4 kV (between power supply and earth) conforming to IEC 61000-4-5 Surge immunity test - test level: 3 kV (between phases) conforming to IEC 61000-4-5 Immunity to conducted RF disturbances - test level: 15 V (0.15...80 MHz) conforming to IEC 61000-4-6 Immunity to magnetic fields - test level: 30 A/m (50...60 Hz) conforming to IEC 61000-4-8 Immunity to voltage dips conforming to IEC 61000-4-11 Disturbing field emission conforming to EN 55016-2-3 Limits for harmonic current emissions conforming to IEC 61000-3-2 conforming to EN 55016-1-2 conforming to EN 55016-2-1
Electromagnetic Emission	Conducted emissions conforming to IEC 61000-6-3 Radiated emissions conforming to IEC 61000-6-4

Packing Units

Unit Type Of Package 1	PCE
Number Of Units In Package 1	1
Package 1 Height	3.7 cm
Package 1 Width	14.0 cm
Package 1 Length	16.0 cm
Package 1 Weight	306.0 g
Unit Type Of Package 2	S03
Number Of Units In Package 2	22
Package 2 Height	30.0 cm
Package 2 Width	30.0 cm
Package 2 Length	40.0 cm
Package 2 Weight	7.271 kg

Sustainability

Green Premium™ label is Schneider Electric's commitment to delivering products with best-in-class environmental performance. Green Premium promises compliance with the latest regulations, transparency on environmental impacts, as well as circular and low-CO_2 products.

Transparency RoHS/REACh

Well-being performance

Mercury Free

Rohs Exemption Information	Yes

Certifications & Standards

Reach Regulation	REACh Declaration
Eu Rohs Directive	Pro-active compliance (Product out of EU RoHS legal scope) EU RoHS Declaration
China Rohs Regulation	China RoHS declaration
Environmental Disclosure	Product Environmental Profile
Weee	The product must be disposed on European Union markets following specific waste collection and never end up in rubbish bins
Circularity Profile	End of Life Information

Dimensions Drawings

Electrical Safety

- If the unit is use in a manner not specified by the manufacturer, the protection provided by the equipment may be impaired.
- For means of disconnection a switch or circuit breaker, located near the product, must be included in the installation. A marking as disconnecting device for the product is required.
- The device has an internal fuse. The unit is tested and approved with branch circuit protective device up to 20A. This circuit breaker can be used as disconnecting device.
- The power supply is only suitable for audio, video, information, communication, industrial and control equipment.

Dimensions

Front and Side Views

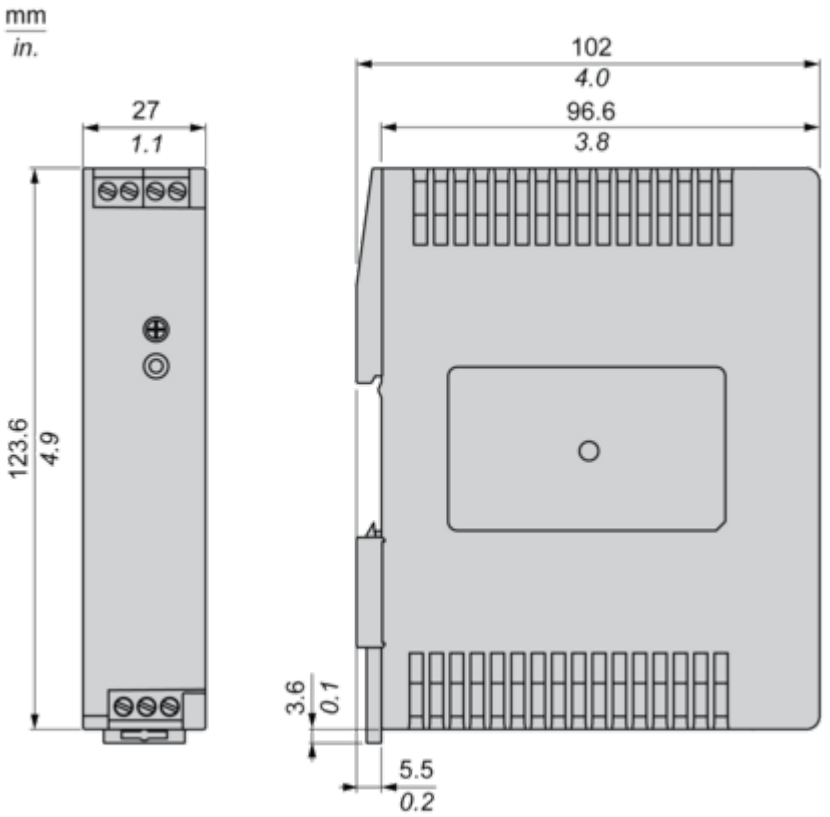

Connections and Schema

Connections and Schema

Correct Parallel Connection

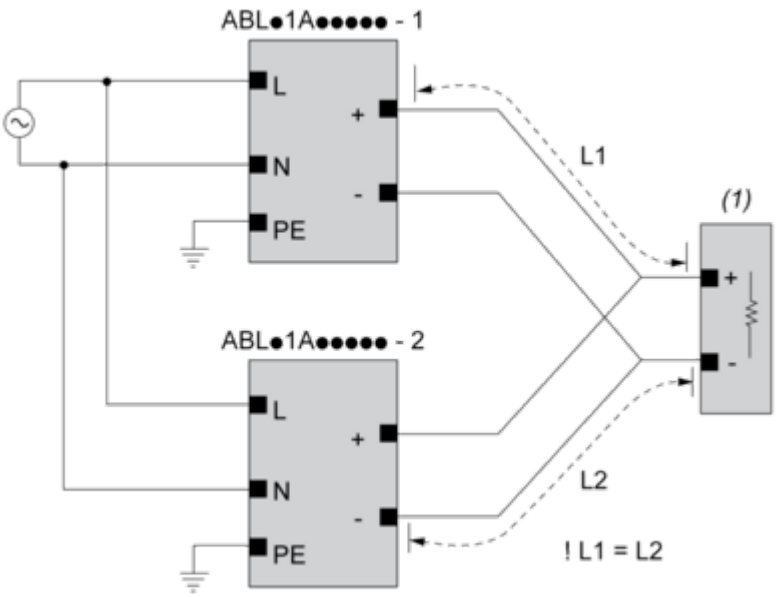

(1) : Load

Incorrect Parallel Connection

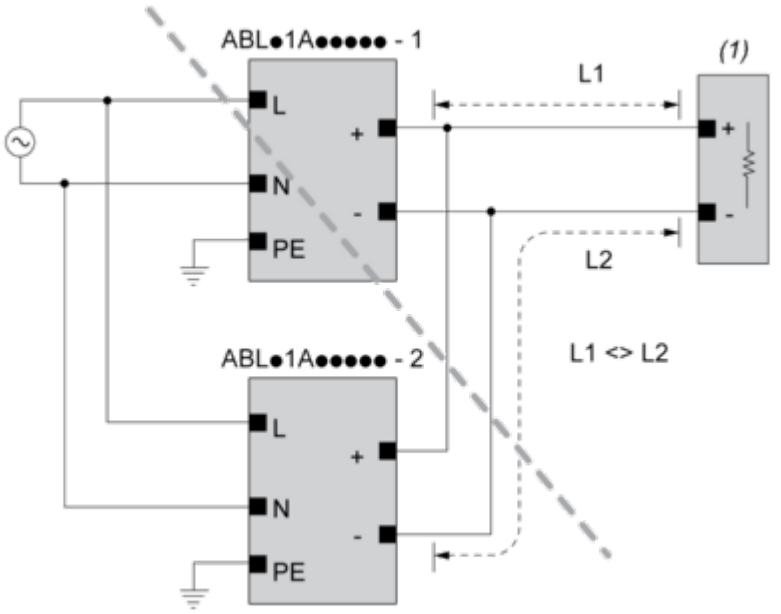

(1) : Load
ABLx1Axxxxx-1 = ABLx1Axxxxx-2
max 2 x ABLx1Axxxxx
L1 = L2
ΔV max 25 mV
I_{Load} < 90% 2 x I_{nom}

Output Voltage Balancing

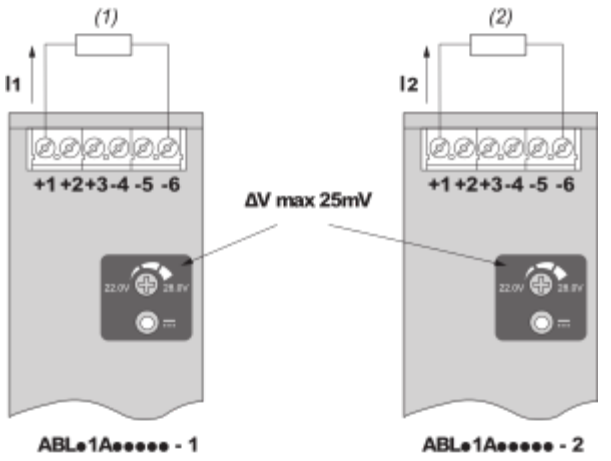

(1) : R_{Load1}
(2) : R_{Load2}
$R_{Load1} = R_{Load2}$
$I_1 = I_2 = \sim I_{nom}$

Series Connection

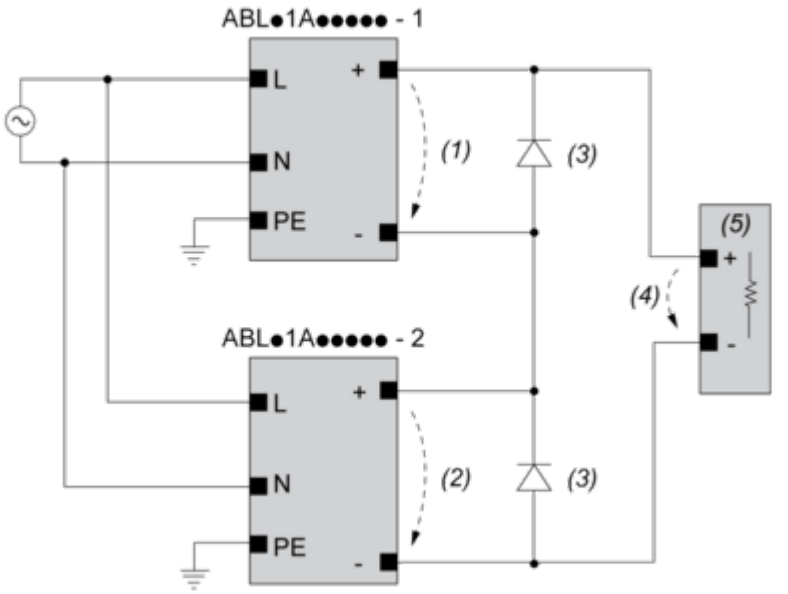

(1) : V_{out1}
(2) : V_{out2}
(3) : 2 x Diode, $V_{RRM} > 2 \times V_{out1/2}$, $I_F > 2 \times I_{nom1/2}$
(4) : $V_{Load} = 2 \times V_{out}$
(5) : Load

Connections and Schema

	(1)		
	<40ºC	<50ºC	<70ºC
ABLS1A24021	50ºC	60ºC	75ºC
ABLS1A24038	50ºC	60ºC	75ºC
ABLS1A12062	50ºC	60ºC	80ºC
ABLS1A24031	50ºC	60ºC	80ºC
ABLS1A12100	60ºC	70ºC	90ºC
ABLS1A24050	60ºC	70ºC	90ºC
ABLS1A48025	60ºC	70ºC	90ºC
ABLS1A24100	60ºC	70ºC	90ºC
ABLS1A24200	95ºC	95ºC	90ºC

(1) : Ambient

Mounting and Clearance

Mounting

Mounting Position A

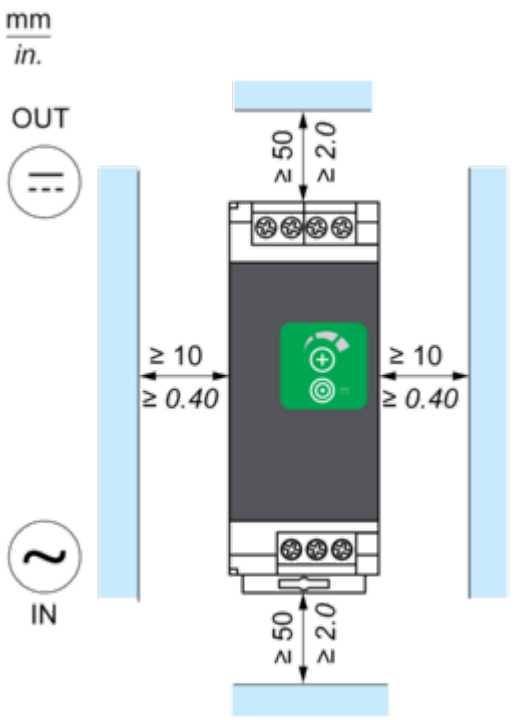

Mounting Position B

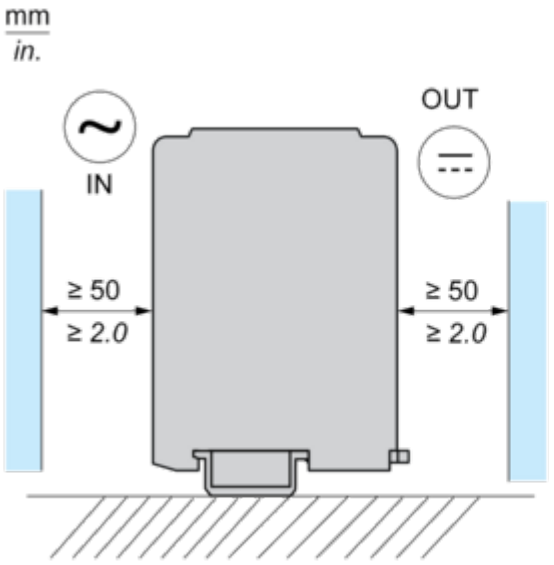

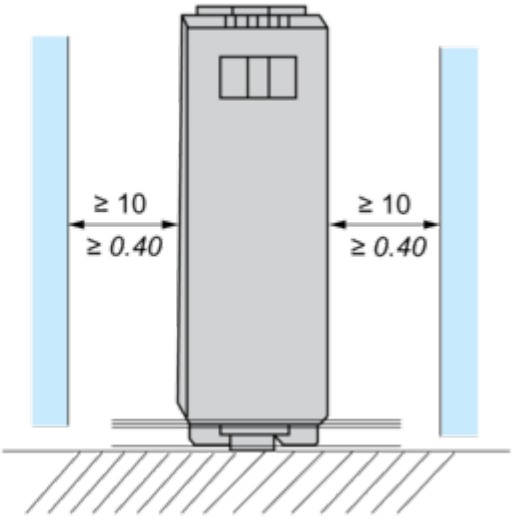

Incorrect Mounting

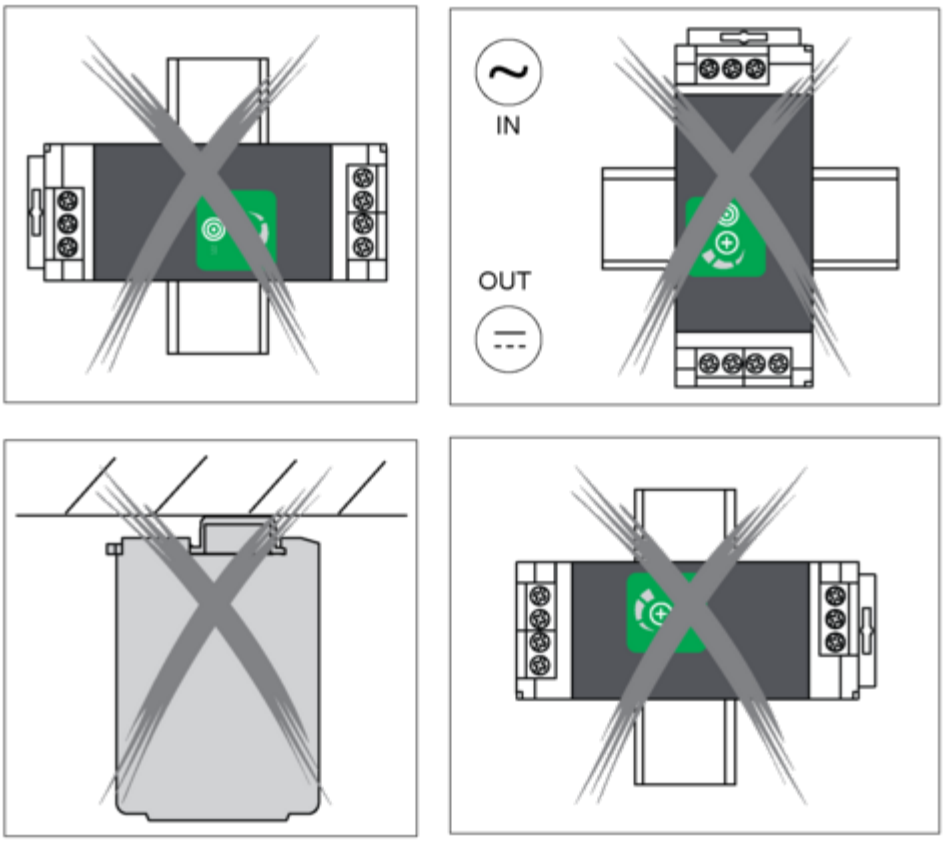
IN
OUT

Performance Curves

Performance Curve

Mounting Position A

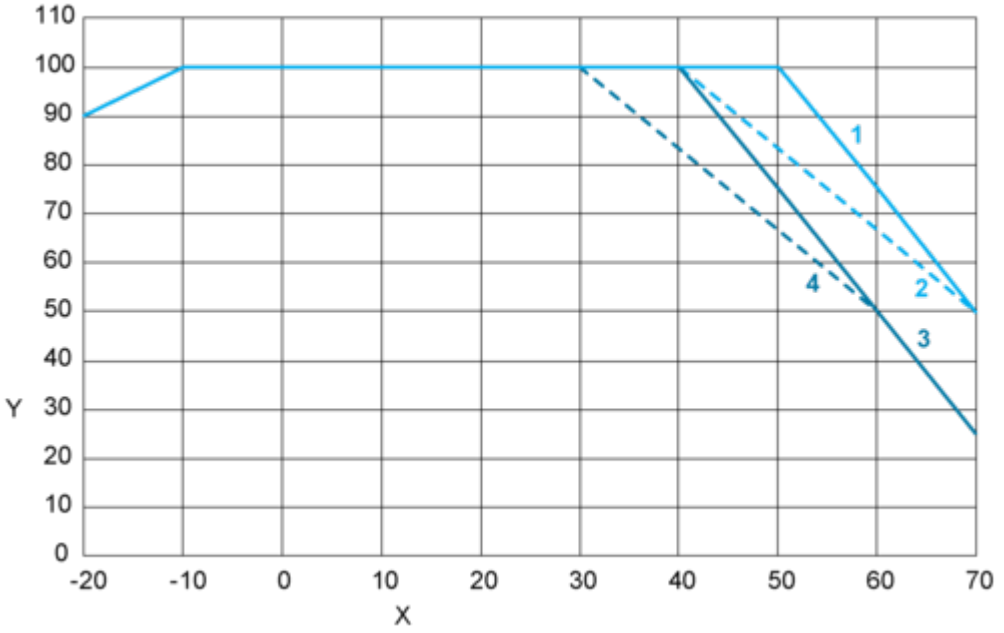

Mounting Position B

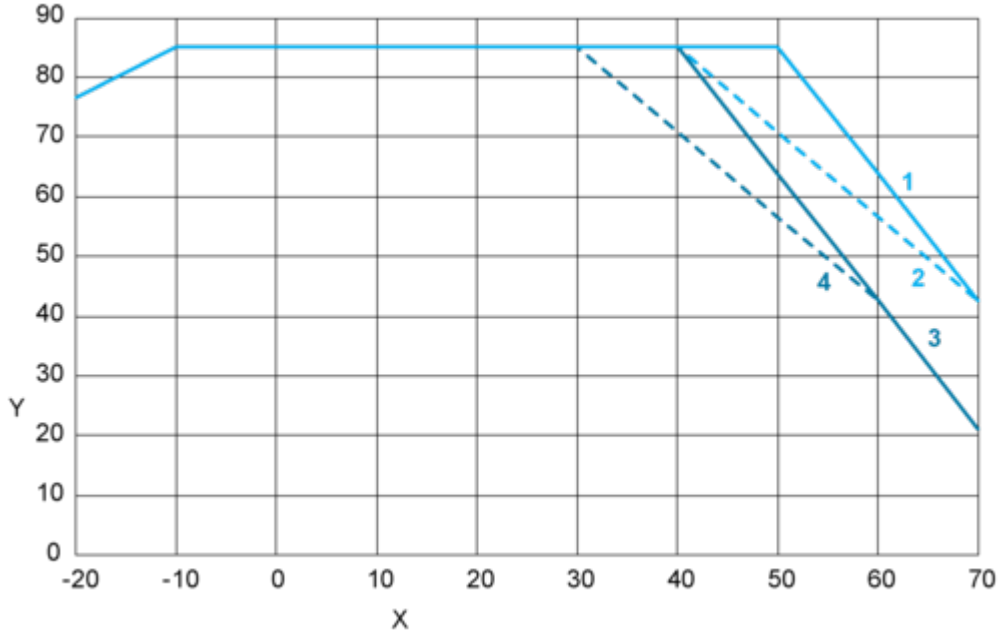

X : Surrounding Air Temperature (°C)
Y : Percentage of Maximum Load (%)
1 : Altitude ≤ 2000 m (6561 ft), Input voltage = 230 VAC / 325 VDC
2 : Altitude ≤ 2000 m (6561 ft), 115 VAC / 162 VDC
3 : Altitude ≤ 5000 m (16404 ft), Input voltage = 230 VAC / 325 VDC
4 : Altitude ≤ 5000 m (16404 ft), 115 VAC / 162 VDC

DC input voltage

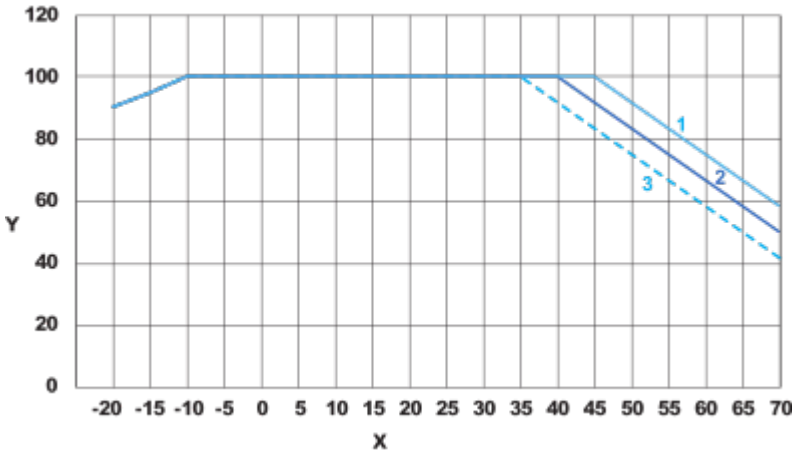

X : Surrounding Air Temperature (°C)
Y : Percentage of Maximum Load (%)
1 : 110 VDC
2 : 90 VDC
3 : 85 VDC